Memorandum

TO: JEFF CONDIT, PROGRAM MANAGER, MRSWMP

FROM: GARY CONLEY, CHIEF SCIENTIST, 2NDNATURE

SUBJECT: METHODOLOGY TO EVALUATE TRASH REDUCTION BENEFITS OF EXISTING BMPS

DATE: AUGUST 19, 2020

2NDNATURE is pleased to provide the Monterey Regional Stormwater Management Program (MRSWMP) with an approach to evaluate the trash reduction benefits of existing hydrodynamic separator units and treatment vaults, as described in the submitted Trash Implementation Plan. Given that these devices are already installed with the potential to capture trash; in many cases, they represent a cost-efficient way to realize substantial trash reduction benefits for several MS4s. While such partial capture requirements are not explicitly defined in the CA Trash Amendments to the California Ocean Plan and the Inland Surface Waters and Enclosed Bays and Estuaries Plan (referred to hereafter as the Trash Amendments), they are discussed extensively as a structural treatment control option throughout the supporting Final Staff Report as a means to mitigate urban trash impacts to receiving waters (SWRCB, 2015).

This memo outlines the methodology and results of a BMP trash capture analysis based on BMP data provided by municipal stormwater staff and hydrologic calculations performed by 2NDNATURE. The purpose of this analysis is to provide a means to demonstrate full capture compliance benefits of existing BMPs and to develop a method to quantify and track trash reductions from BMPs that provide partial trash capture benefits. The methodology resulting from this analysis has been reviewed by both Central Coast permittees and Central Coast Water Board staff with suggested changes integrated to the final document. The method developed for assessing partial capture credit will be integrated to the Trash Module of the 2Nform Stormwater Platform for ongoing usage by all Central Coast MS4s.

APPROACH OVERVIEW

This analysis relied on structural BMP flow capture as a proxy for trash capture, which directly aligns with CA State Water Board guidelines that define criteria of trash full capture systems (FCS's) (SWRCB, 2016). All structural BMPs were inventoried in the 2Nform Platform with associated design specifications and drainage area delineations. Peak flows were calculated for each device using either the Rational Method or swTELR, depending on the drainage area size. Calculated peak discharge values for each device drainage were compared against the specific designed treatment rate of each device. The resulting flow capture proportion was used to determine which devices should be considered Full Capture Systems or Partial Capture Systems and the proportion of partial capture credit to assign to each device.

Device Inventory

Twenty-eight devices were fully inventoried within the 2Nform Platform. Structural BMP type was determined per the 2Nform Structural BMP Type Definitions and locations of devices are shown in Figure 1. Type-specific inventory information varies across BMP types but generally includes number of inlets, number of outlets, treatment capacity, footprint, treatment rate[1]. Drainage areas for each device were delineated in 2Nform either from original design specifications or using standard techniques including use of high-resolution elevation data, storm drain infrastructure schematics, and engineering and design plans provided by municipal staff (see Appendix A). Generally, drainage areas are within MS4 boundaries, but in cases when they extend beyond the MS4 boundary, as in the City of Carmel, the drainage outside of the MS4 was included in the calculations. design specifications and drainage area details were verified with city staff prior to finalizing the inventory. Drainage areas were used in combination with the National Land Cover Dataset (NLCD) impervious cover layer to calculate the average percent imperviousness within each drainage area for use in peak flow calculations.

Figure 1. *Maps show device locations and inventory summary (A), drainage areas (B*) and NLCD impervious cover data used to estimate peak flows (C*). Close up drainage area maps are provided in Appendix C. (*inset maps B and C do not show County of Monterey drainages)*

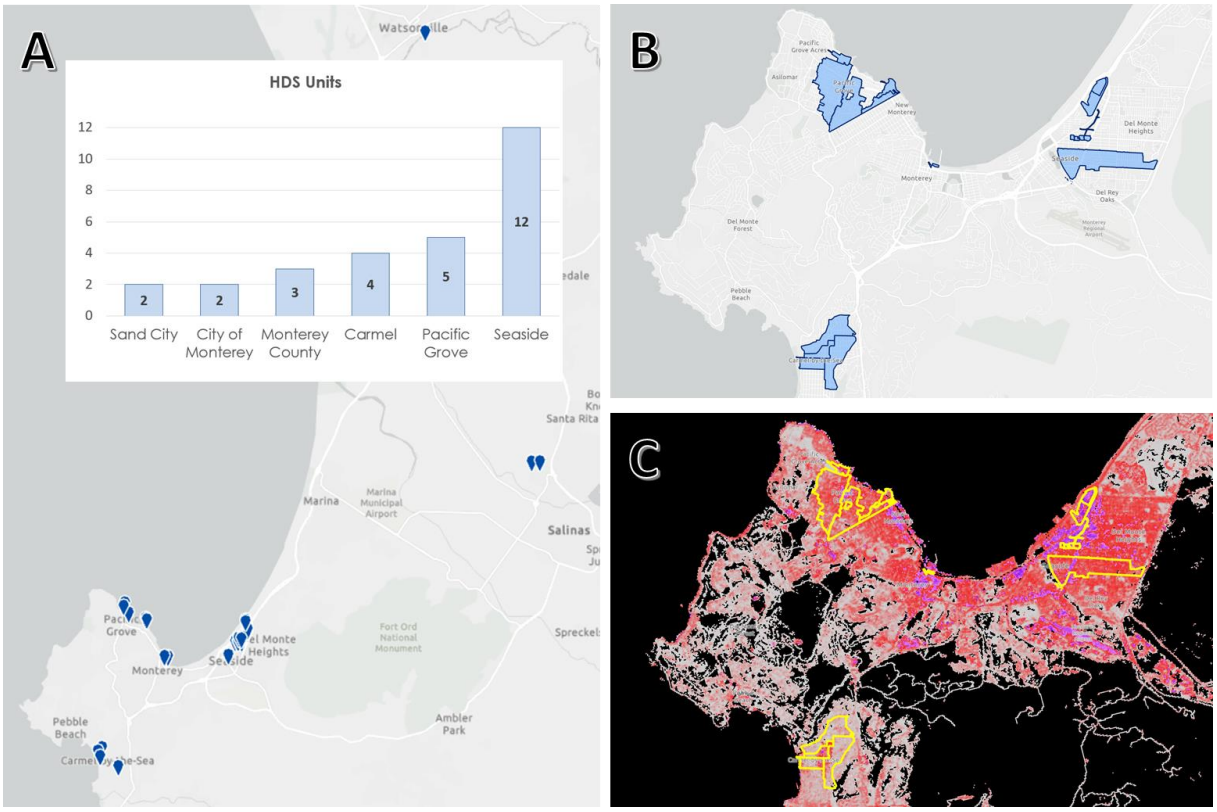

[1] See Appendix A for device-specific design plans. See Appendix B for device-specific manufacturer/model information and treatment rates used in this analysis.

Partial Capture Evaluation

The Trash Amendments specify the requirements for Full Capture Devices as:

> ***Full capture system*** *is a treatment control, or series of treatment controls, including but not limited to, a multi-benefit project or a low-impact development control that:*
>
> 1. *has a design treatment capacity that is either: a) of not less than the peak flow rate, Q, resulting from a one-year, one-hour, storm in the subdrainage area, or b) appropriately sized to, and designed to carry at least the same flows as, the corresponding storm drain, and*
> 2. *traps all particles that are 5 mm or greater.*

Peak Flow Calculations

Per the State Water Resources Control Board's documentation of Certified Multi-Benefit Trash Treatment Systems (updated July 9, 2019), peak flow rates shall be calculated using one of the following methods:

- For small drainage areas (less than 50 acres) – The Rational Method
- For larger drainage areas (greater than 50 acres) – Other accepted hydrologic mathematical methods to more accurately calculate peak flow rates.

The main difference between the rational method and methods suitable for larger catchments is that the rational method does not account of timing of flows as they move through a drainage. 2NDNATURE staff split the existing inventory based on their drainage areas and calculated peak flow rates as outlined in the following descriptions.

Rational Method

The Rational Method is a simple and widely used peak flow calculation method used to size stormwater infrastructure that assumes no lag in flow timing. It uses the following formula:

$$Q = C*i*A$$

Where:
Q = peak runoff rate (cfs)
C = runoff coefficient
i = rainfall intensity (in/hr)
A = total drainage area (acres)

2NDNATURE applied the Rational Method to the 22 devices that have drainage areas less than 50 acres. Below this drainage area, it can reasonably be assumed that the time to peak flow is less than or similar to the time of concentration within the drainage. For the purpose of this analysis, the runoff coefficient (C) was calculated as an average of 5% less than the average percent imperviousness of the drainage area (shown in Table 1) per the empirical relationships observed in urbanized areas throughout the Central Coast and cities throughout the U.S. (see Scheuler, 2000). Rainfall intensity was set to 0.46 in/hr, consistent with the average 1-year, 1-hour storm event for the Monterey Bay region as determined by the NOAA Precipitation Frequency Data Server.

Table 1. *Detailed results of trash capture analysis based on data from municipal staff. See Appendix B for additional device details and Appendix A for CDS model specific treatment rates.*

City	BMP ID	BMP Type	Drainage Area (ac)	Average Percent Impervious (%)	Runoff Coefficient	Peak Flow (cfs)	Treatment Rate (cfs)	Peak Flow Capture (%)	State Approved Device?	Final Results	Final Determination
Carmel	CDS1	Treatment Vault	123.8	14.7	0.1	2.1	6.0	100%	Yes	100%	High Partial Capture
Carmel	CDS4	Treatment Vault	134.0	21.4	0.2	2.3	6.0	100%	Yes	100%	High Partial Capture
Pacific Grove	Greenwood Park	Treatment Vault	160.5	50.1	0.5	4.1	35.0	100%	Yes	100%	High Partial Capture
Seaside	S66-CB9	Infiltration Feature	3.2	79.8	0.7	1.1	3.0	100%	Yes	100%	High Partial Capture
Seaside	S66-CB12	Infiltration Feature	5.2	80.7	0.8	1.8	3.0	100%	Yes	100%	High Partial Capture
Seaside	S66-CB10	Infiltration Feature	3.0	81.5	0.8	1.1	3.0	100%	Yes	100%	High Partial Capture
Seaside	S66-CB4	Infiltration Feature	1.0	85.3	0.8	0.4	0.5	100%	Yes	100%	High Partial Capture
Seaside	S66-CB11	Infiltration Feature	3.9	86.3	0.8	1.5	3.0	100%	Yes	100%	High Partial Capture
Seaside	S66-CB1	Infiltration Feature	0.9	86.8	0.8	0.3	0.5	100%	Yes	100%	High Partial Capture
Seaside	S66-CB5	Infiltration Feature	0.3	89.5	0.8	0.1	0.5	100%	Yes	100%	High Partial Capture
Seaside	S66-CB3	Infiltration Feature	1.0	90.0	0.9	0.4	0.5	100%	Yes	100%	High Partial Capture
Seaside	S66-CB2	Infiltration Feature	0.7	92.0	0.9	0.3	0.5	100%	Yes	100%	High Partial Capture
Seaside	S66-CB7	Infiltration Feature	0.7	95.7	0.9	0.3	0.5	100%	Yes	100%	High Partial Capture
Seaside	S66-CB6	Infiltration Feature	0.3	98.0	0.9	0.1	0.5	100%	Yes	100%	High Partial Capture
Pacific Grove	PG_CDS_Oceanview17th	Treatment Vault	237.4	49.6	0.4	6.2	8.4	100%	Yes	100%	High Partial Capture
Carmel	CDS2	Treatment Vault	39.6	41.0	0.4	6.6	6.0	91%	Yes	91%	High Partial Capture
Pacific Grove	PG_CDS_Eardley	Treatment Vault	33.3	58.5	0.5	8.2	5.3	65%	Yes	65%	High Partial Capture
Carmel	CDS3	Treatment Vault	46.5	32.8	0.3	5.9	3.8	64%	Yes	64%	High Partial Capture
Pacific Grove	PG_CDS_LP_Parking	Treatment Vault	22.6	54.7	0.5	5.2	2.8	54%	Yes	54%	High Partial Capture
Pacific Grove	PG_CDS_Oceanview	Treatment Vault	27.9	52.8	0.5	6.1	2.2	36%	Yes	36%	Low Partial Capture
Monterey County	MCO_TV7	Treatment Vault	134.0	21.4	0.2	1.1	14.0	100%	No	Not FCS	No Trash Capture
Monterey County	MCO_TV5	Treatment Vault	32.7	40.1	0.4	5.3	14.0	100%	No	Not FCS	No Trash Capture
City of Monterey	D05-STMH9	Sediment Trap	2.3	72.7	0.7	0.7	2.5	100%	No	Not FCS	No Trash Capture
Monterey County	MCO_TV1	Treatment Vault	2.6	77.4	0.7	0.9	14.0	100%	No	Not FCS	No Trash Capture
City of Monterey	D05-STMH39	Sediment Trap	1.1	86.6	0.8	0.4	2.5	100%	No	Not FCS	No Trash Capture
Seaside	S69-TV1	Treatment Vault	278.8	63.4	0.6	3.0	126.0	100%	No*	2N Field Analysis	--
Sand City	Sand_Dollar_SWInt1	Treatment Vault	47.0	72.2	0.7	14.5	23.7	100%	No*	2N Field Analysis	--
Sand City	Edgewater_SWInt1	Treatment Vault	24.2	83.2	0.8	8.7	9.6	100%	No*	2N Field Analysis	--

THE SWTELR MODEL

2NDNATURE applied swTELR model, previously reported in Beck et al. (2017) and Conley et al. (2019; 2020), to calculate peak flow for the 6 devices with drainage areas greater than 50 acres. swTELR is an accepted method for demonstrating stormwater runoff and pollutant load reductions for the Central Coast Region and has been applied and validated in urban watersheds throughout California (2NDNATURE, 2017). For the purpose of this analysis, swTELR was applied to calculate peak flows for each device, using the drainage areas, percent impervious cover, slope, and soil type. Like the Rational Method calculations, swTELR runoff generation was driven by the 1-year, 1-hr storm event for the Monterey Bay region (0.46 in).

swTELR typically uses a set of metrics that describe a 30-year rainfall distribution in combination with well-tested algorithms for rainfall runoff transformation and routing to generate average annual runoff estimates on an urban catchment scale. The USDA Velocity Method is employed in swTELR with adjustments for urban catchments (USDA, 1986), which was used to account for flow timing larger drainage areas that cannot be accurately represented via the Rational Method. Peak discharge calculations within swTELR rely on well tested graphical peak discharge and unit hydrograph methods (Beck et al. 2017; USDA 1986).

CALCULATING PARTIAL CAPTURE OF PEAK FLOWS

This evaluation consisted primarily of an analysis to determine design treatment capacities and compare them to runoff generated by the 1-year, 1-hour storm specified in the CA Trash Amendments. 2NDNATURE staff reviewed proprietary design specifications, engineering 'as-builts', and additional documentation to identify the designed treatment rate of each device.

Municipal storm drain infrastructure is traditionally designed to treat much larger and lower frequency storms (10-year or 25-year average storm recurrence interval), which is roughly 0.8-1.08 inches of rainfall per hour in the Monterey Bay Peninsula per NOAA precipitation frequency mapping[2]. Given that this is a much higher design standard, all the corresponding storm drains are sized to carry equal or greater flows than the 1-year, 1-hour storm specified in the CA Trash Amendments. Thus, the 1-year, 1-hour storm is the appropriate basis for comparison to determine whether a device qualifies as an FCS, since this is generally a lower standard than the storm drain infrastructure design standard.

Partial Capture was evaluated based on a comparison of the estimated peak flow rate and the specified device treatment rate:

$$\mathbf{P = F / T}$$

Where:
P = percent trash capture (%)
F = calculated peak flow (cfs)
T = designed treatment rate (cfs)

2NDNATURE calculated the partial capture proportion for all 28 devices using the peak flows calculated by the relevant method per the drainage area size. For both methods, peak flows were calculated based

[2] https://hdsc.nws.noaa.gov/hdsc/pfds/pfds_map_cont.html?bkmrk=ca

on the runoff volume from the 1-year, 1-hour storm, per requirements stated in the CA State Trash Amendments, which equates to roughly 0.46 inches per hour. We categorized devices according to their partial capture proportion of flow/trash capture.

Trapping Material >5MM

Per the State Water Resources Control Board's documentation of Certified Multi-Benefit Trash Treatment Systems and the Certified Multi-Benefit Trash Treatment Systems cover sheet (both updated July 9, 2019), trash capture devices must trap trash particles that are 5-mm or greater with "a screen at the system's inlet, outlet or bypass outlet"[3].

Twenty of the devices inventoried were identified on the SWRCB certified list. The 8 remaining devices include 3 Contech Vortechs (County of Monterey), 2 IMBRIUM Stormcepters (City of Monterey), 2 Jensen Stormwater Interceptors (City of Sand City), and one non-proprietary vault (City of Seaside).

- The Contech Vortechs systems and IMPRIUM Stormceptors do not qualify as Full Capture Devices and were excluded from the remainder of the analysis. Per the CA State Water Board documentation, these devices could be evaluated for potential retrofit with a 5mm screen or could potentially be approved by the SWRCB via a formal application process.

- The Jensen Stormwater Interceptors and the unidentified vault were part of additional field analysis completed by 2NDNATURE. Complete descriptions and recommendations for each of these structures are included in separate memos provided by 2NDNATURE to MRWSMP as part of this contract.

Trash Capture Analysis Results

The results of the peak flow analysis and 5mm particle capture determination were combined to produce the results as shown below in Table 1 and Figure 2. Twenty of the devices had corresponding SWRCB entries on the certified list effectively satisfying the 5mm particle capture requirement. Of those, 15 devices were determined to be Full Capture (>99% partial capture), 4 were determined to be High Partial Capture (>50% partial capture), and the 1 remaining devices had Low Partial Capture (<50%). All the devices in the Full Capture category provide flow capture greater than the runoff generated from the 1-year, 1-hour storm, so have a calculated 100% trash capture rate. Five of the devices fell into Partial Capture Categories, which were not designed to meet the Trash Amendments design storm requirements, but certainly provide some trash capture benefits, particularly when their aggregate drainage areas are considered. As such, their inclusion in calculations for tracking trash compliance will provide a more accurate representation of the level of municipal trash mitigation implementation progress.

[3] Criteria taken directly from the State Water Board's "Certified Multi-Benefit Trash Treatment Systems" document (July 2019). 2NDNATURE acknowledges that this language may seem contradictory, as placing a screen at a device's bypass outlet would allow treated flows to pass through the device without passing through the screen. https://www.waterboards.ca.gov/water_issues/programs/stormwater/docs/trash_implementation/mbts_coversheet_05aug19.pdf

Figure 2. *Device count summary of trash capture analysis results.*

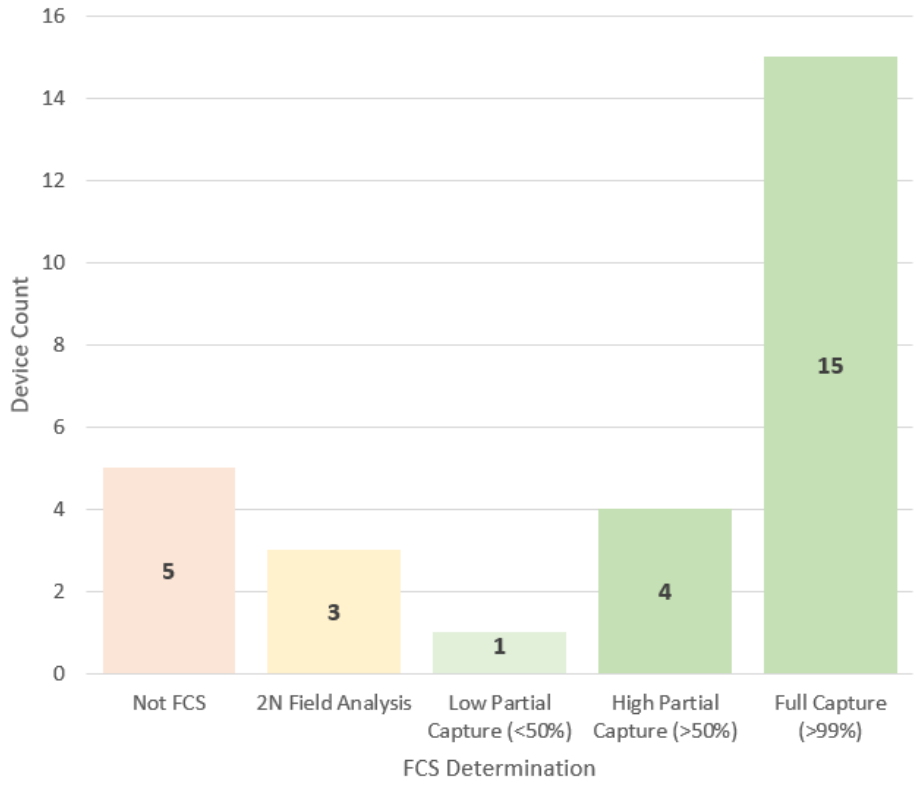

Discussion of Results

Runoff Coefficients & Impervious Cover

A key input to this analysis, for both the Rational Method and the swTELR approach, is the satellite-derived impervious cover from the 2016 Landsat satellite series[4] - available from the USGS at 30-meter resolution (Table 1). Impervious cover dramatically reduces runoff infiltration to soils, typically producing much more runoff than undeveloped areas. Use of satellite imagery to estimate impervious cover has several important benefits, including robust processing and validation, regular updates, and easy access by any municipality. For Rational Method calculations, the runoff coefficient (C) was defined as 0.05 less than the average percent imperviousness of the drainage area (Scheuler, 2000). swTELR combines drainage area impervious cover with other factors including slope, drainage geometry, and soil type to calculate runoff. Given that previous researchers have found the NLCD dataset used in this analysis to be accurate with very small bias (1.5%) when compared with high resolution ($1m^2$) data in urbanized areas (Wickam, et al. 2018), we have confidence in the reliability these data as a driving factor in this analysis.

As shown in Table 1, the drainage areas of some devices have a very low average imperviousness, particularly Carmel CDS4 and CDS1, which can be characteristic of residential areas with substantial

[4] https://www.mrlc.gov/data?f%5B0%5D=category%3Aurban%20imperviousness

open spaces or tree cover. This means that different imperviousness estimates can result from on-the-ground mapping vs satellite data. The urban canopy is hydrologically relevant since trees reduce rainfall available for runoff via interception, storage, and evapotranspiration. Rooting action from trees and shrubs break up the soil providing conduits to deeper subsurface flow of water. All of these factors mean that the urban canopy reduces the effective impervious area of cities and reduces runoff generation, particularly for lower intensity rainfall events. Research has documented the substantial stormwater runoff reductions that urban trees provide precisely because of the way that they alter rainfall-runoff transformation processes (Dwyer et al., 1992; Roy et al., 2012).

Time of Concentration & Design Storm Standards

Peak flows for devices with larger drainage areas (greater than 50 acres) were calculated using swTELR to more accurately account for the time of concentration within drainages (as suggested by the CA Trash Amendments). The results show that all devices with >50-acre drainage areas, that also meet the 5mm capture requirement, treat 100% of the calculated peak flows from the 1-year, 1-hour storm from their corresponding drainage areas.

For the purpose of this analysis, the 1-year, 1-hour storm was assumed to occur in isolation from any preceding or subsequent storms, since this is the most straightforward interpretation of the FCS peak flow requirements listed in the Trash Amendments. However, it is important to acknowledge that in some cases, the time of concentration for the drainage associated with a device may exceed the 1-hour interval of the CA State Amendments design storm (1-year, 1-hour). Therefore, a given device may not be able to fully treat several 1-year, 1-hour storms that occur in sequence with a duration corresponding to the time of concentration for the associated drainage. While this consideration may be relevant to the practical treatment capacity of such devices, there are no references in any current CA State Amendments documentation[5] that discuss or require the need for devices to treat back-to-back or multiple recurring instances of the 1-year, 1-hour storm.

Partial capture metrics

This analysis employed the percentage of peak flow accommodated by devices relative to the estimated peak flow from the 1-year, 1-hr. storm for calculating partial capture credit. Another way to assign partial capture credit would be to use device flow rates to estimate the associated treated depth of rainfall, and then use the 1-hr rainfall cumulative distribution function (CDF) estimated from long-term records to calculate the probability that local rainfall depths would exceed that depth for any given 1-hr event. On suggestion from the Central Coast Water Board and State Water Board Staff to explore this as a potential metric, we conducted preliminary anslysis for using probability of exceedance as a partial capture credit metric, which yielded several insights. Firstly, if all rain events are considered, flows rarely exceed any device flow rates. This is because most of the CDF is composed of very small rainfall events that occur very frequently. Secondly, if a threshold is set, such as 0.1'' of rain, below which rainfall events are not considered in calculating the empirical CDF, the probability of exceeding the flow capacity of devices becomes much higher. Preliminary results suggest that it may yield similar outputs to the peak flow method, but this would need to be assessed for individual cases.

[5] https://www.waterboards.ca.gov/water_issues/programs/stormwater/trash_implementation.html

A central issue with the probability-based approach using the CDF is that it relies on the assumption that all flows included in the calculation provide equal trash transport potential. Each percentile on the CDF would be mapped to one percentile of partial capture credit, regardless of the amount of trash that those rainfall events transport. Observations in 3 study catchments in Salinas (City of Salinas, 2019) indicate that large flows move an amount of trash to the bottom of urban outfalls that is disproportionate to their probability of occurrence. Given that partial trash capture credit should align with the degree to which a device mitigates trash impacts, e.g. trash volume transported to receiving waters, the appropriate metric should be sensitive to the trash transport influence of high flow events. The peak flow proportionality metric used in this study reflects this disparity more directly compared to an exceedance probability metric. It also avoids the problem of identifying the appropriate threshold below which flows would not be considered due to very low runoff generation or trash transport potential.

Implementation of Partial Capture Method for Ongoing Tracking

The peak flow proportionality method described in this memo will be implemented in the 2Nform platform in a manner consistent with ongoing trash implementation effectiveness tracking. 2Nform already employs a robust methodology to track and report progress towards the CA Trash Amendments goal of 100% trash reduction in priority urban areas that has been vetted through the scientific peer-review process (Conley et al., 2019). Progress tracking in 2Nform is spatially explicit to avoid arbitrary or subjective determinations of progress and to allow for efficient synthesis of data that document both structural and institutional controls. The method used to estimate trash reductions associated with partial capture systems will be incorporated into the existing platform structure to utilize the existing user input, quantification methods, and output display.

The 2Nform Trash Module tracks the acreage of MS4 area in compliance or "Treated," achieved either by either field verified drainage areas served by Full Capture Systems or regular visual trash assessments that serve as a proxy to quantify the overall effectiveness of institutional controls. Areas that show evidence of improvement, but do not fully meet requirements (e.g. due to low levels of trash condition certainty), are represented as "In Progress." This provides a close alignment of the outputs with monitoring and analysis recommendations from the Ocean Science Trust to ensure realistic measures of progress towards trash improvement goals and accounting transparency (Wheeler and Knight, 2017).

To fit into the existing 2Nform structure, we will rely on the delineated drainage areas for each device. Based on the analysis described, we propose the following primary elements for ongoing quantification of trash capture benefits of existing BMPs within 2Nform:

1. Devices that have been assessed as Full Capture per the analysis already described will be represented as "Treated."
2. The amount of "Treated" acreage contributed by each device will depend on its calculated percent capture.
3. Full Capture systems will contribute 100% of their drainage area acreage to the "Treated" total. Partial Capture devices will contribute their percentage of their total drainage area to the "Treated" total. For example, a Partial Capture device that treats 10 total acres with 60% capture will contribute 6 "Treated" acres to the MS4 total.

4. Drainage areas of Full Capture Systems (>99% capture) and High Partial Capture systems (>50% capture) will display as dark green ("Treated") within the 2Nform Platform. Low Partial Capture Systems (<50% capture) will display as light green ("In Progress").

Figure 3 provides an example output for the City of Watsonville using the parameters described above for trash benefits calculations and display of spatial outputs for "Treated" and "In Progress" areas.

Areas of an MS4 that achieve Partial Capture credit due to not meeting the full flow capture requirements can still be brought into full compliance via visual assessments. Since there is no sensible way to divide the drainage area of a partial capture device for spatial allocation of "Treated" credit, these drainages will be handled as individual units. Any additional acreage within the drainage area that is demonstrated litter free ("Treated") by visual assessments, will be combined with the partial credit acreage achieved by the structural device area (not to exceed the total drainage area), per the equation below.

T = P*A + V

Where:
T = total "Treated" area (acres) - ***not to exceed the total drainage area***
P = percent trash capture (%)
A = total drainage area (acres)
V = visual assessment "Treated" area within drainage area (acres)

For example, a Partial Capture device with 60% capture that drains 10 total acres will contribute 6 "Treated" acres to the MS4 total via the trash capture device. If 4 acres within the drainage area are demonstrated litter free by visual assessments, then the drainage area would receive 100% credit and would contribute all 10 acres of its drainage area to the MS4's "Treated" total.

While there is no way to perform an accounting that ensures that trash will not be present on streets when a storm occurs that exceeds a partial capture device peak flow rate, improved trash conditions within that drainage will substantially reduce the likelihood of that occurrence. The greater area of a drainage that is observed to be in treated condition, the less opportunity there will be for storm flows in exceedance of the device flow rate to bypass carrying trash.

While State Water Board has expressed support the approach described in this memo, given that no data yet exist to assess the efficacy of devices to be assigned partial trash capture credit, they have suggested that a long-term monitoring approach would be valuable to verify allocated partial capture benefits. This would be a special study to test key assumptions associated with partial trash capture with the potential to inform whether or not any adjustments to partial capture credit allocation would be warranted. The experimental design would include a secondary trash capture structure that is regularly cleaned out after storms to measure the amount of trash that bypasses the device. Such an experiment would need to be conducted over several years, so while it is far beyond the scope of this analysis, it should be considered by MRSWMP as a means to provide robust verification of effectiveness for partial capture devices.

Figure 3. *Example integration of partial capture methods to the 2Nform Trash Module.*

References Cited

Beck, N.G., Conley, G., Kanner, L., Mathias, M. 2017. An urban runoff model designed to inform stormwater management decisions. Journal of Environmental Management v193: 257-269. (http://dx.doi.org/10.1016/j.jenvman.2017.02.007\)

Conley, G., Beck, N., Riihimaki, C.A. and Hoke, C., 2019. Improving urban trash reduction tracking with spatially distributed Bayesian uncertainty estimates. Computers, Environment and Urban

Appendix A. Design Plans

CDS® Models and Capacities

	CDS MODEL	Treatment Flow Rates[1]			Estimated Maximum Peak Conveyance Flow[3] (cfs)/(L/s)	Minimum Sump Storage Capacity[4] (yd^3)/(m^3)	Minimum Oil Storage Capacity[4] (gal)/(L)
		75 microns (cfs)/(L/s)	125 microns[2] (cfs)/(L/s)	Trash & Debris (cfs)/(L/s)			
PRECAST	CDS2015-4	0.5 (14.2)	0.7 (19.8)	1.0 (28.3)	10 (283)	0.9 (0.7)	61 (232)
	CDS2015-5	0.5 (14.2)	0.7(19.8)	1.0 (28.3)	10 (283)	1.5 (1.1)	83 (313)
	CDS2020-5	0.7 (19.8)	1.1 (31.2)	1.5 (42.5)	14 (396)	1.5 (1.1)	99 (376)
	CDS2025-5	1.1 (31.2)	1.6 (45.3)	2.2 (62.3)	14 (396)	1.5 (1.1)	116 (439)
	CDS3020-6	1.4 (39.6)	2.0 (56.6)	2.8 (79.3)	20 (566)	2.1 (1.6)	184 (696)
	CDS3025-6	1.7 (48.1)	2.5 (70.8)	3.5 (99.2)	20 (566)	2.1 (1.6)	210 (795)
	CDS3030-6	2.0 (56.6)	3.0 (85.0)	4.2 (118.9)	20 (566)	2.1 (1.6)	236 (895)
	CDS3035-6	2.6 (73.6)	3.8 (106.2)	5.3 (150.0)	20 (566)	2.1 (1.6)	263 (994)
	CDS4030-8	3.1 (87.7)	4.5 (127.4)	6.3 (178.3)	30 (850)	5.6 (4.3)	426 (1612)
	CDS4040-8	4.1 (116.1)	6.0 (169.9)	8.4 (237.8)	30 (850)	5.6 (4.3)	520 (1970)
	CDS4045-8	5.1 (144.4)	7.5 (212.4)	10.5 (297.2)	30 (850)	5.6 (4.3)	568 (2149)
	CDS5640-10	6.1 (172.7)	9.0 (254.9)	12.6 (356.7)	50 (1416)	8.7 (6.7)	758 (2869)
	CDS5653-10	9.5 (268.9)	14.0 (396.5)	19.6 (554.8)	50 (1416)	8.7 (6.7)	965 (3652)
	CDS5668-10	12.9 (365.1)	19.0 (538.1)	26.6 (752.9)	50 (1416)	8.7 (6.7)	1172 (4435)
	CDS5678-10	17.0 (481.2)	25.0 (708.0)	35.0 (990.7)	50 (1416)	8.7 (6.7)	1309 (4956)
	CDS9280-12	27.2 (770.2)	40.0 (1132.7)	56.0 (1585.7)	Offline	16.8 (12.8)	N/A
	CDS9290-12	35.4 (1002.4)	52.0 (1472.5)	72 (2038.8)		16.8 (12.8)	
	CDS92100-12	42.8 (1212.0)	63.0 (1783.9)	88 (2491.9)		16.8 (12.8)	
CAST-IN-PLACE	CDS150134-22	100.7 (2851.5)	148.0 (4190.9)	270 (7645.6)		56.3 (43.0)	
	CDS200164-26	183.6 (5199.0)	270.0 (7645.6)	378.0 (10703.8)		78.7 (60.2)	
	CDS240160-32	204 (5776.6)	300.0 (8495.1)	420.0 (8495.1)		119.1 (91.1)	
	Additional Cast-in-Place models available upon request.						

1. Alternative PSD/D_{50} sizing is available upon request.
2. 125 micron flows are based on the CDS Washington State Department of Ecology approval for 80% removal of a particle size distribution (PSD) having a mean particle size (D_{50}) of 125 microns.
3. Estimated maximum peak conveyance flow is calculated using conservative values and may be exceeded on sites with lower inflow velocities and sufficient head over the weir.
4. Sump and oil capacities can be customized to meet site needs

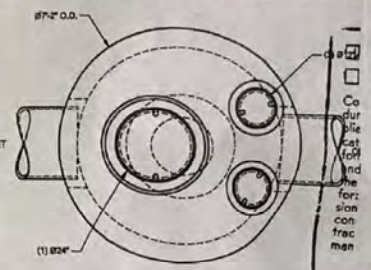

PLAN VIEW

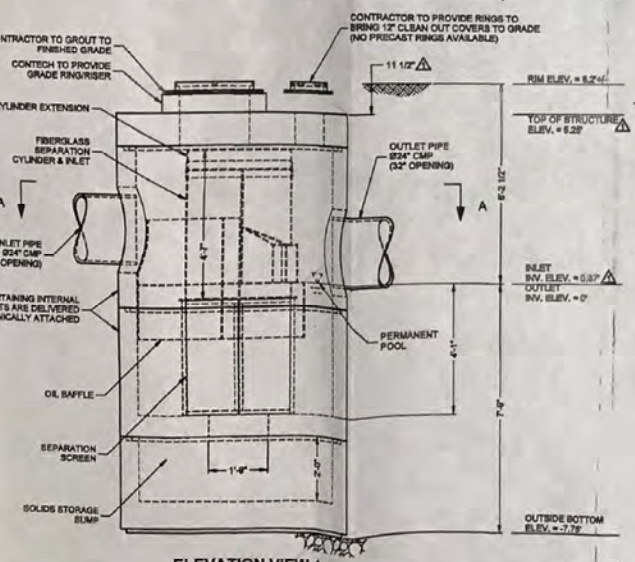

ELEVATION VIEW

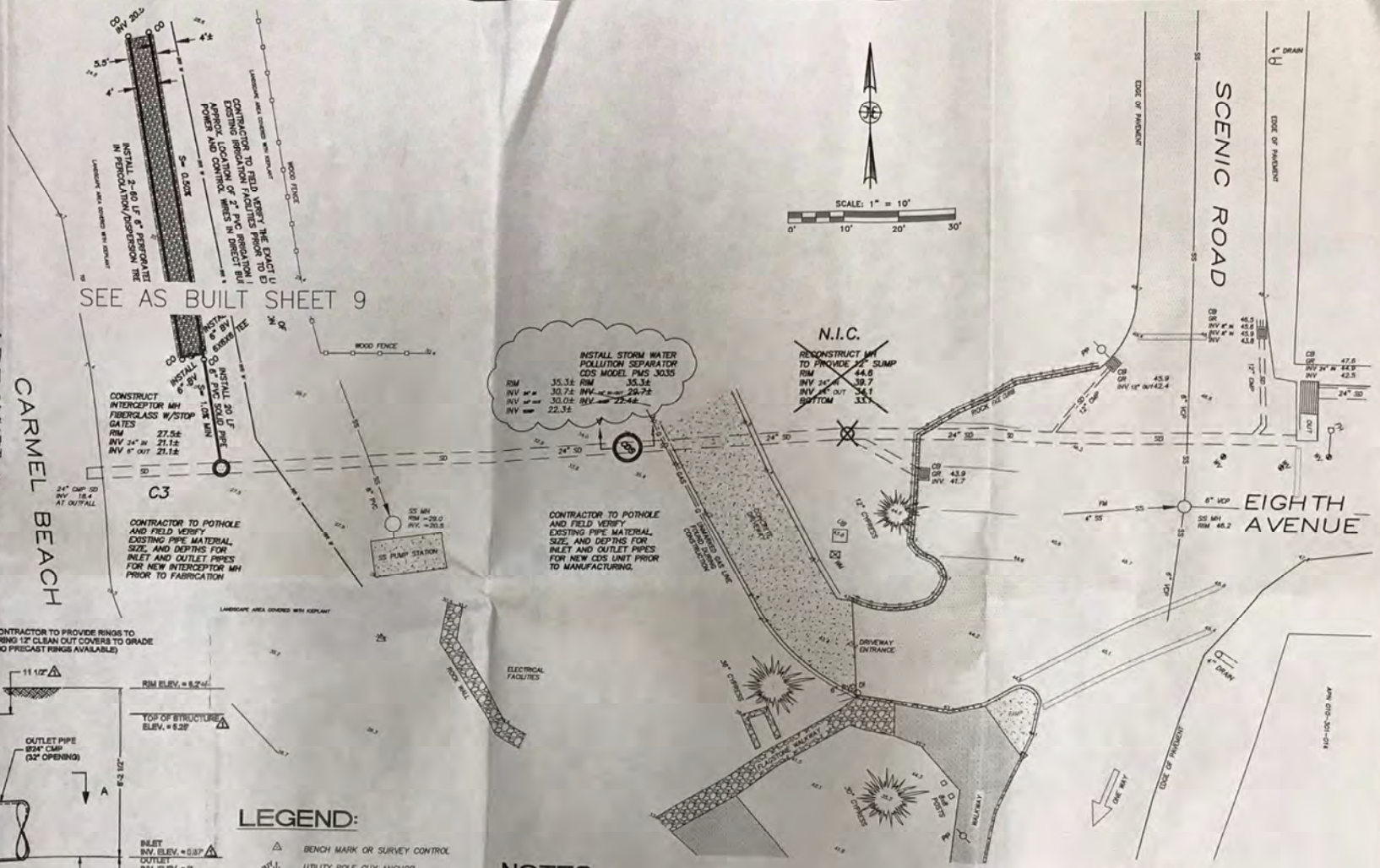

LEGEND:

- BENCH MARK OR SURVEY CONTROL
- UTILITY POLE GUY ANCHOR
- POWER POLE
- UNDERGROUND GAS LINE
- SEWER CLEAN OUT
- MANHOLE
- STORM DRAIN
- WATER LINE
- WATER METER
- WATER VALVE
- GAS VALVE
- BALL VALVE
- SPOT ELEVATION
- CATCH BASIN
- CYPRESS
- TREE
- UNDERGROUND SANITARY SEWER
- FENCE OR RAILING

NOTES:

(1) BENCHMARK IS A 1" BRASS DISK, LOCATED AT THE ADA RAMP AT THE CORNER OF SCENIC ROAD AND SANTA LUCIA. ELEVATION 30.09 FEET BASED ON NATIONAL GEODETIC VERTICAL DATUM OF 1988. TOPOGRAPHIC ELEVATIONS WERE TAKEN JUNE AND JULY 2012.

(2) UNDERGROUND UTILITIES AND SERVICES ARE NOT ALL SHOWN. CONTRACTOR SHALL CONTACT U.S.A. (800-227-2600) TO IDENTIFY THE EXACT LOCATION OF ALL UNDERGROUND UTILITIES PRIOR TO CONSTRUCTION. CONTRACTOR SHALL POTHOLE TO VERIFY THE EXACT LOCATIONS AND DEPTHS OF POTENTIAL CONFLICTING UTILITIES PRIOR TO CONSTRUCTION, AND SHALL NOTIFY THE ENGINEER OF ANY UTILITY CONFLICTS.

(3) THIS PLAN PORTRAYS THE SITE AT THE TIME OF THE SURVEY AND DOES NOT IDENTIFY SOILS, GEOLOGY INFORMATION, OR UNDERGROUND CONDITIONS.

(4) THE DECIMAL PLACE INDICATES THE HORIZONTAL POSITION OF THE SPOT ELEVATION SHOWN.

(5) EXISTING 2" MAIN IRRIGATION LINE, SPRINKLER LINES, SPRINKLER HEADS, AND CONTROL WIRES LOCATED ALONG SCENIC ROAD ARE NOT ALL SHOWN. CONTRACTOR SHALL BE RESPONSIBLE TO REPAIR ANY DAMAGE TO THESE FACILITIES DURING CONSTRUCTION.

REGISTERED PROFESSIONAL ENGINEER SHERMAN R. LOW No. 29411 EXP. 3-31-15 CIVIL STATE OF CALIFORNIA

W.O. 8280-PH2
8280-13.ASC
DECEMBER 2013
SCALE: 1"=10'

AS BUILT

CHANGE ORDER No. 1

NEILL ENGINEERS CORP. CARMEL, CALIFORNIA

URBAN RUNOFF DIVERSION PROJECT

SCENIC ROAD

AT 8TH AVE & SCENIC RD

CARMEL-BY-THE-SEA, CALIFORNIA

Registered Civil Engineer No. 29411 Date

PLAN VIEW

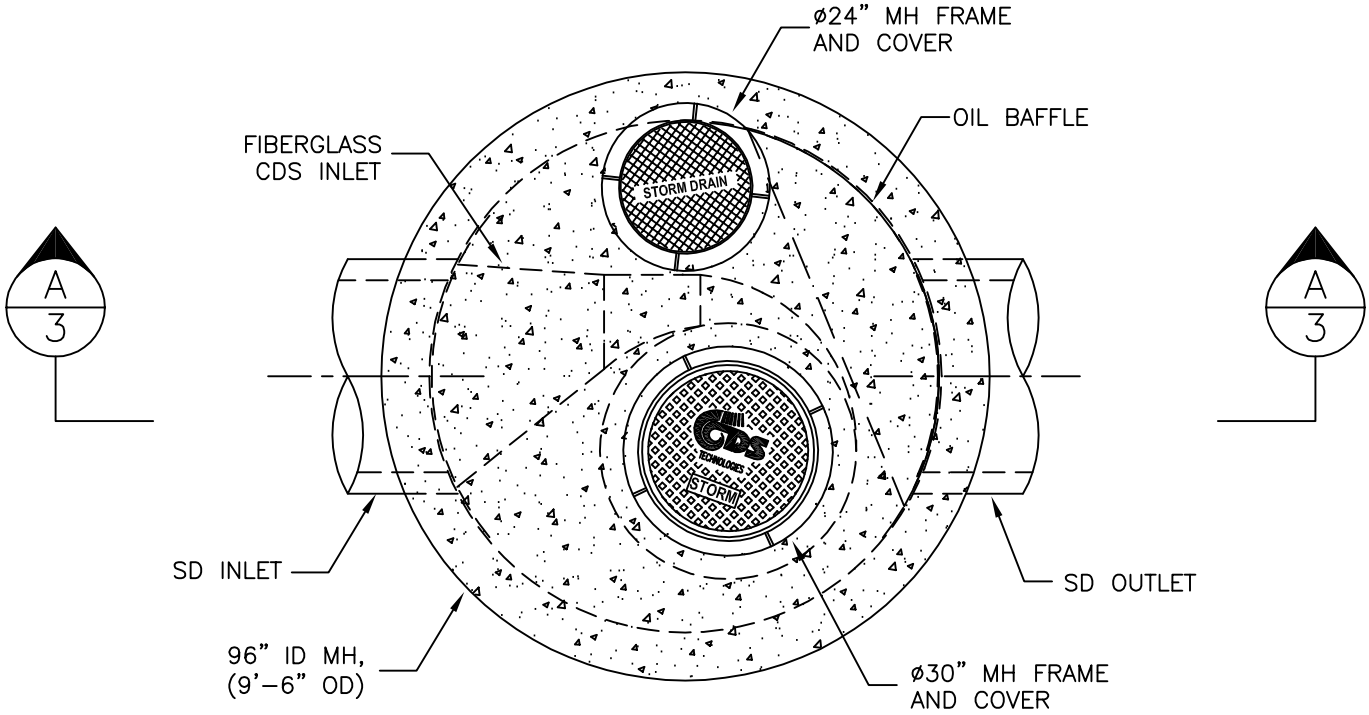

NOTE:
THE INTERNAL COMPONENTS ARE SHOWN IN THE RIGHT-HAND CONFIGURATION-THESE COMPONENTS MAY BE FURNISHED IN THE MIRROR IMAGE TO THAT SHOWN (LEFT-HAND CONFIGURATION).

CDS MODEL PMSU40_40
STORM WATER TREATMENT

CDS TECHNOLOGIES™	PROJECT NAME PROJECT LOCATION	JOB#	SCALE 1"=36"
		DATE: 6/05	SHEET
		DRAWN:	1
		APPROV.	

16360 MONTEREY RD. SUITE 250 MORGAN HILL, CA 95037 TEL: (888) 535-7559 FAX: (408) 782-0721

SECTION B-B

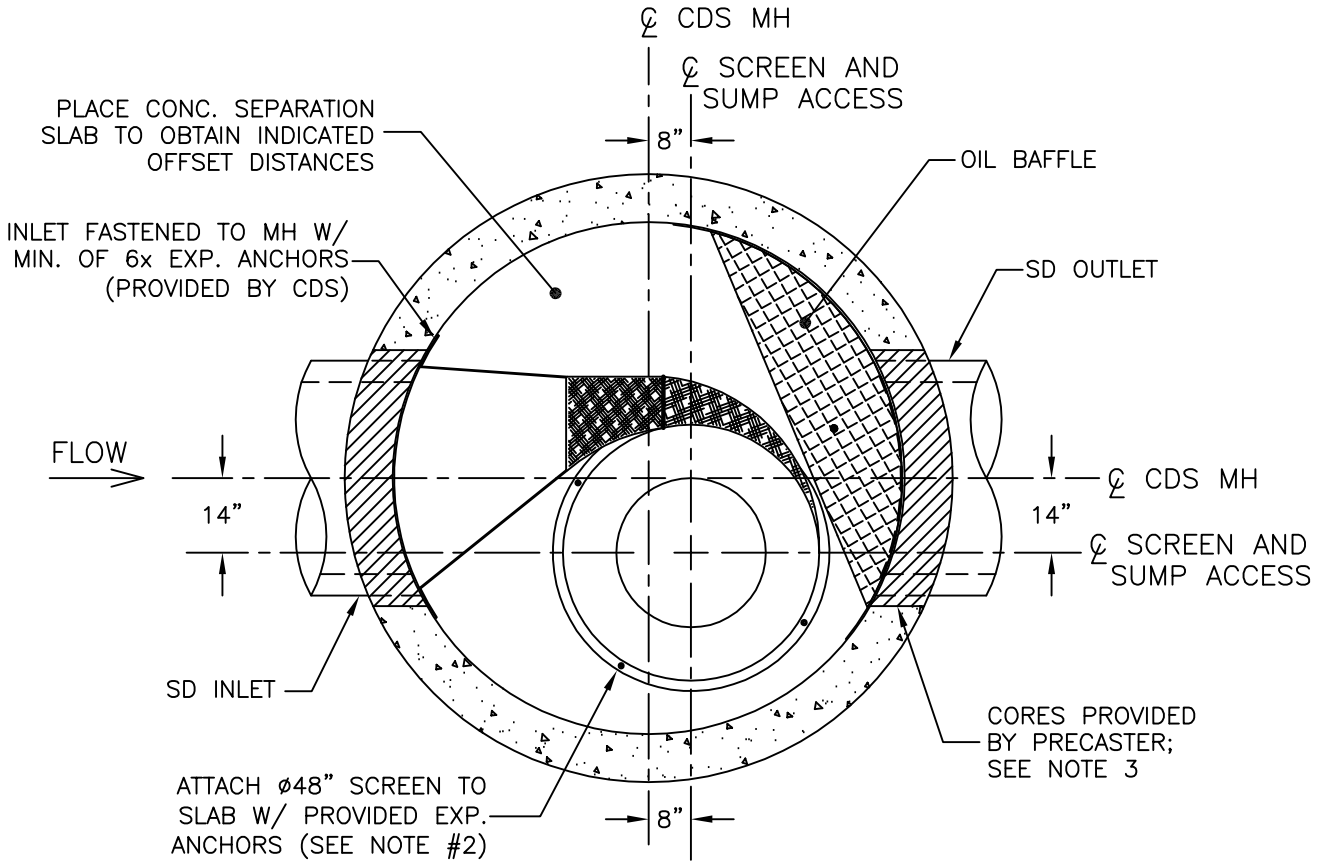

NOTES:

1. THE INTERNAL COMPONENTS ARE SHOWN IN THE RIGHT-HAND CONFIGURATION.
2. FOR PROPER INSTALLATION, GREEN FLANGE ON SCREEN FACES UP; RED FLANGE FACES DOWN & FASTENS TO SEPARATION SLAB.
3. OVERSIZED CORES ARE PROVIDED TO ACCOUNT FOR DIFFERENT PIPEWALL THICKNESSES-ENSURE SUFFICIENT EXCAVATION DEPTH TO ATTAIN (EXTERNAL) SUMP INVERT ELEVATION (SEE SHEET 3).

CDS MODEL PMSU40_40
STORM WATER TREATMENT

CDS TECHNOLOGIES™	PROJECT NAME PROJECT LOCATION	JOB#	SCALE 1"=36"
		DATE: 6/05	SHEET
		DRAWN:	2
		APPROV.	

16360 MONTEREY RD. SUITE 250 MORGAN HILL, CA 95037 TEL: (888) 535-7559 FAX: (408) 782-0721

SECTION A-A
ELEVATION VIEW

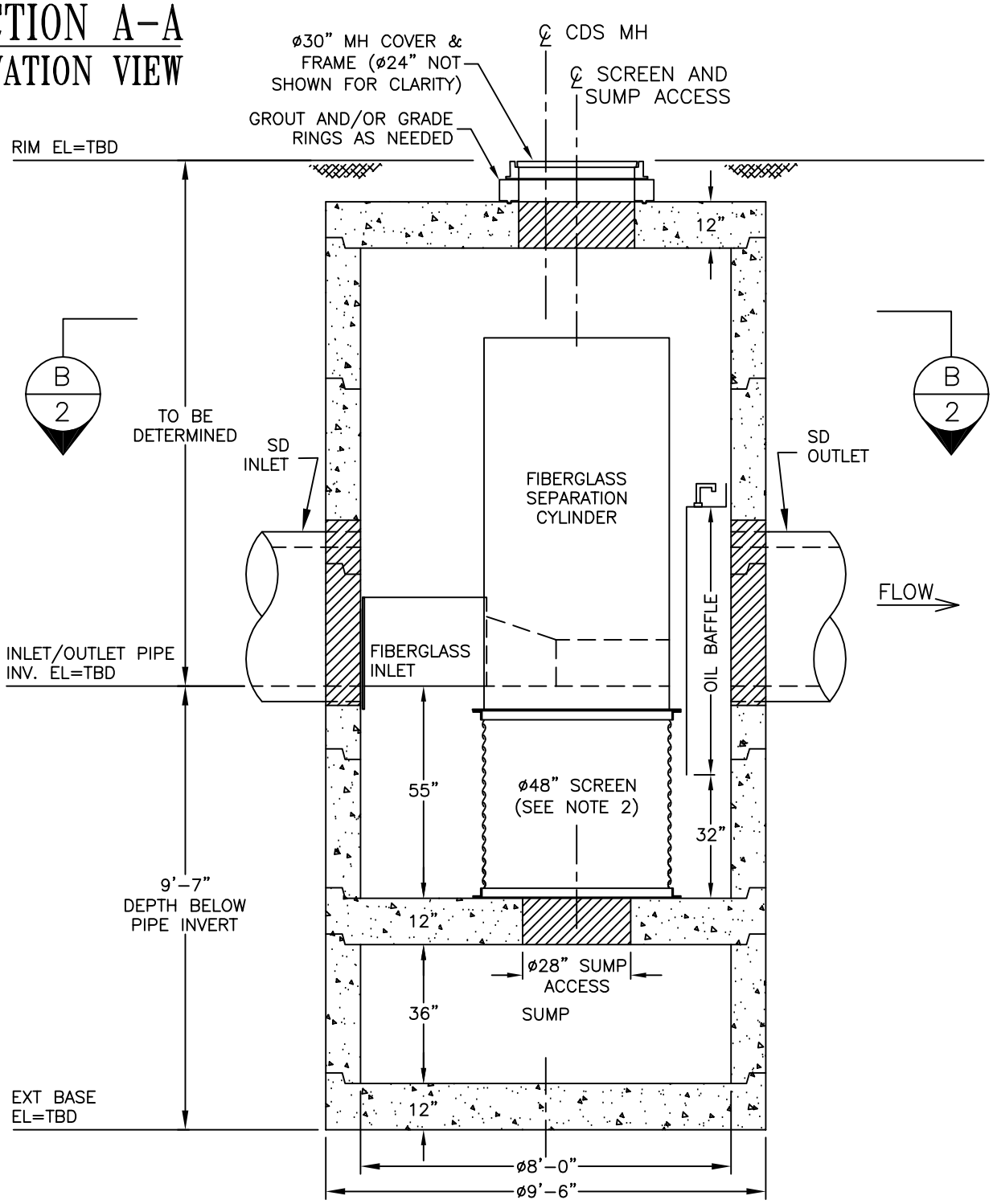

NOTES:

1. OVERSIZED CORES ARE PROVIDED TO ACCOUNT FOR DIFFERENT PIPEWALL THICKNESSES–ENSURE SUFFICIENT EXCAVATION DEPTH TO ATTAIN INDICATED (EXTERNAL) BASE ELEVATION.
2. FOR PROPER INSTALLATION, GREEN FLANGE ON SCREEN FACES UP & FASTENS TO FIBERGLASS CYLINDER FLANGE; RED FLANGE FASTENS TO SEPARATION SLAB WITH PROVIDED ANCHORS.

CDS MODEL PMSU40_40
STORM WATER TREATMENT

CDS TECHNOLOGIES™	PROJECT NAME PROJECT LOCATION	JOB#	SCALE 1"=40"
		DATE: 6/05	SHEET
		DRAWN:	3
		APPROV.	

16360 MONTEREY RD. SUITE 250 MORGAN HILL, CA 95037 TEL: (888) 535-7559 FAX: (408) 782-0721

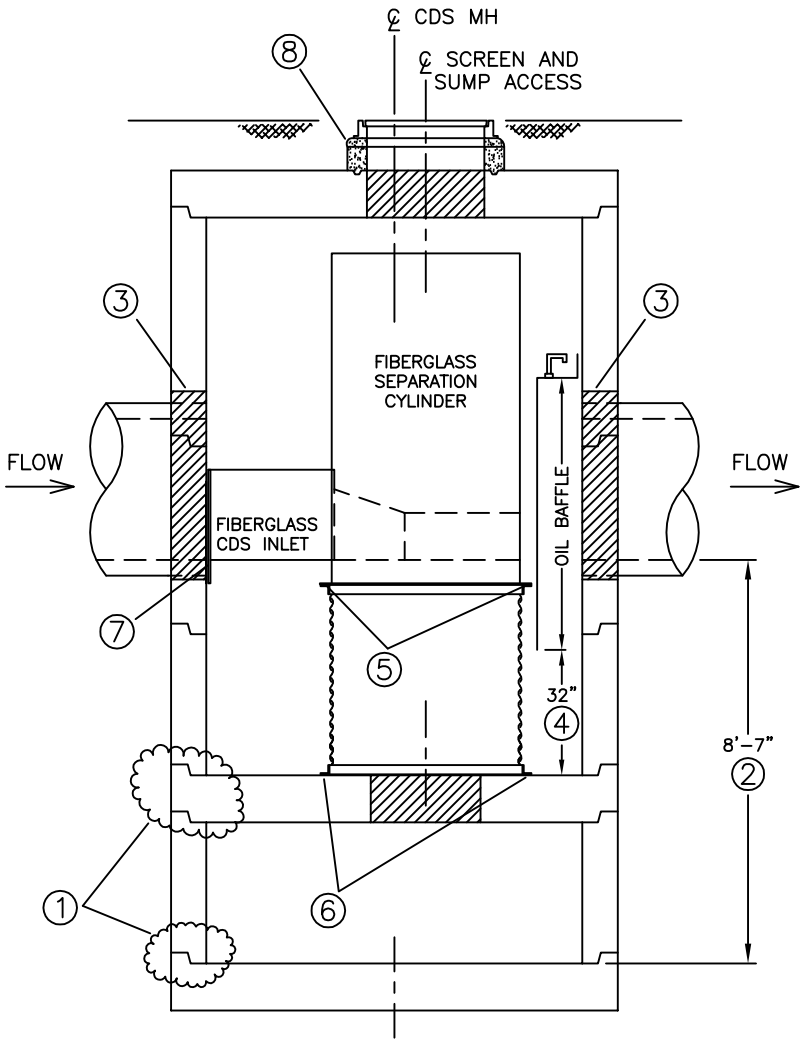

CONSTRUCTION NOTES:

1. APPLY BUTYL MASTIC AND/OR GROUT TO SEAL JOINTS OF MANHOLE STRUCTURE. APPLY LOAD TO MASTIC SEAL IN JOINTS OF MH SECTIONS TO COMPRESS SEALANT IF NECESSARY. UNIT MUST BE WATER TIGHT, HOLDING WATER UP TO FLOWLINE INVERT (MINIMUM).
2. PRIOR TO PLACING MORE PRECAST COMPONENTS, ENSURE 8'-7" FROM TOP OF BASE SLAB TO OUTLET PIPE AND CDS INLET INVERTS.
3. PLACE GROUT TO SEAL PIPE-MH CONNECTIONS.
4. SET BOTTOM OF OIL BAFFLE 32" ABOVE SEPARATION SLAB FLOOR; DRILL AND INSERT 3/8" x 3 3/4" 316SS EXPANSION ANCHORS @ 12 O.C. TO SECURE BAFFLE FLANGE TO RISER WALL (HARDWARE PROVIDED BY CDS TECHNOLOGIES).
5. FASTEN FIBERGLASS CYLINDER/INLET TO SCREEN ASSEMBLY USING FOUR (4) SETS OF 1/2" x 1 1/2" SS HEX HEAD BOLTS W/ NUTS AND WASHERS-(HARDWARE SUPPLIED BY CDS TECHNOLOGIES). IN THE LEFT-HANDED CONFIGURATION THE "RED" COLORED FLANGE ON THE SCREEN CYLINDER SHALL FACE UP. IN THE RIGHT-HANDED CONFIGURATION, THE "GREEN" COLORED FLANGE SHALL FACE UP (SEE SHEETS 1 & 2 FOR UNIT ORIENTATION).
6. VERIFY THAT SCREEN ASSEMBLY IS CENTERED OVER SUMP ACCESS HOLE AND ADJUST IF NECESSARY; FASTEN SCREEN TO SEPARATION SLAB USING FOUR (4) 3/8" x 3 3/4" 316SS EXPANSION BOLTS-(HARDWARE PROVIDED BY CDS TECHNOLOGIES).
7. DRILL AND INSERT A MINIMUM OF SIX (6) 3/8" x 3 3/4" 316SS EXPANSION BOLTS EQUALLY SPACED TO SECURE FIBERGLASS INLET FLANGE TO RISER WALL-(HARDWARE PROVIDED BY CDS TECHNOLOGIES).
8. PLACE GRADE RINGS AND/OR GROUT TO MATCH GRADE; SEAL AS REQUIRED.

CDS TECHNOLOGIES™	MISCELLANEOUS NOTES CDS MODEL PMSU40_40	JOB#	SCALE N.T.S.
		DATE: 6/05	SHEET
		DRAWN:	4
		APPROV.	

16360 MONTEREY RD. SUITE 250 MORGAN HILL, CA 95037 TEL: (888) 535-7559 FAX: (408) 782-0721

Downstream Defender®

High-Level Treatment in a Small Footprint

Product Profile

The Downstream Defender® is an advanced vortex separator used to treat stormwater runoff in pretreatment or stand-alone applications. Its unique flow-modifying internal components distinguish the Downstream Defender® from conventional and simple swirl separators that typically bypass untreated peak flows to prevent washout of captured pollutants. Its wide treatment flow range, low headloss, small footprint and low-profile make it a compact and economical solution for capturing nonpoint source pollution.

Components

1. Inlet to Precast Vortex Chamber
2. Cylindrical Baffle
3. Center Shaft
4. Outlet Pipe
5. Sediment Storage Sump
6. Access Lid

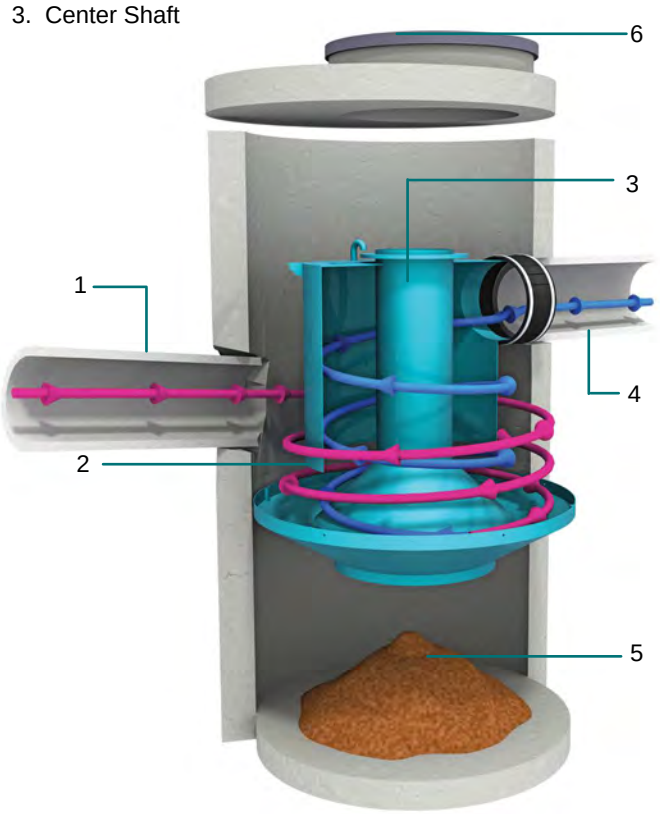

Fig.1 The Downstream Defender® has internal components designed to maximize pollutant capture and minimize pollutant washout.

Applications

- Removal of total suspended solids (TSS), floatable trash and petroleum products from stormwater runoff
- New construction or redevelopment of commercial and residential sites
- Pollutant hotspots such as maintenance yards, parking lots, gas stations, streets, highways, airports and transportation hubs
- Site constrained LID or green infrastructure based developments
- LEED® development projects

Advantages

- Special internal components maximize pollutant capture and minimize footprint, headloss and washout
- Captures and retains a wide range of TSS particles
- High peak treatment flow rates
- Treats the entire storm with no washout or untreated bypass flows
- Low maintenance requirements - no dredging required, and no screens or media to block
- Variable inlet/outlet angles for ease of site layout

How it Works

Advanced hydrodynamic vortex separation is a complex hydraulic process that augments gravity separation with low-energy rotary forces. The flow modifying internal components used in the Downstream Defender® harness the energy from vortex flow and maximize the time for separation to occur while deflecting high scour velocities (**Fig.1**).

Polluted stormwater is introduced tangentially into the side of the precast vortex chamber to establish rotational flow. A cylindrical baffle with an inner center shaft creates an outer (magenta arrow) and inner (blue arrow) spiraling column of flow and ensures maximum residence time for pollutant travel between the inlet and outlet.

Oil, trash and other floating pollutants are captured and stored on the surface of the outer spiraling column. Low energy vortex motion directs sediment into the protected sump region. Only after following a long three-dimensional flow path is the treated stormwater discharged from the outlet pipe. Maintenance ports at ground level provide access for easy inspection and clean-out.

Downstream Defender®

Drainage Profile

The Downstream Defender® is designed with a submerged tangential inlet to minimize turbulence within the device. Turbulence increases system headlosses and reduces performance by keeping pollutant particles in suspension.

The inlet elevation of the Downstream Defender® is located one inlet pipe diameter lower than the elevation of the outlet invert (**Fig.2**). This arrangement ensures that influent flows are introduced to the treatment chamber quiescently below the water surface elevation, minimizing turbulence.

The unique flow-modifying internal components also minimize hydraulic losses. There are no internal weirs or orifices; large clear openings ensure low headloss at peak flow rates with little risk of blockages that cause upstream flooding.

Inspection and Maintenance

Nobody maintains our systems better than we do. To ensure optimal, ongoing device performance, be sure to recommend Hydro International as a preferred service and maintenance provider to your clients.

Call **1 (800) 848-2706** to schedule an inspection and cleanout or learn more at **hydro-int.com/service**

Sizing & Design

The Downstream Defender® can be used to meet a wide range of stormwater treatment objectives. It is available in 5 precast models that fit easily into the drainage network (**Table 1)**. Selection and layout of the appropriate Downstream Defender® model depends on site hydraulics, site constraints and local regulations. Both online (**Fig.3a)** and offline (**Fig.3b**) configurations are common.

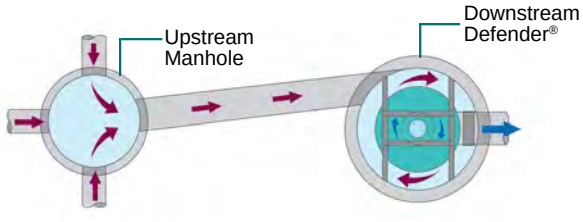

Fig.3a The Downstream Defender® in an online configuration.

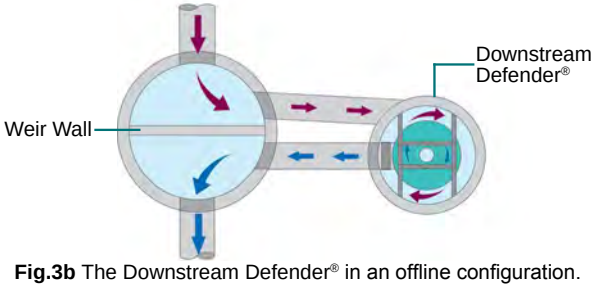

Fig.3b The Downstream Defender® in an offline configuration.

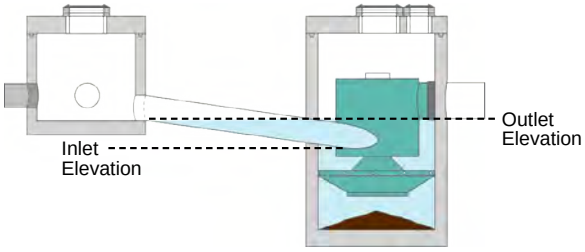

Fig.2 The Downstream Defender® has a submerged inlet that reduces headloss and improves efficiency of pollutant capture.

Free *Stormwater Sizing Tool*

This simple online tool will recommend the best separator, model size and online/offline arrangement based on site-specific data entered by the user.

Go to hydro-int.com/sizing to access the tool.

Table 1. Downstream Defender® Design Chart.

Model Number and Diameter		Peak Treatment Flow Rate		Maximum Pipe Diameter		Oil Storage Capacity		Sediment Storage Capacity		Minimum Distance from Outlet Invert to Top of Rim		Standard Height from Outlet Invert to Sump Floor	
(ft)	(m)	(cfs)	(L/s)	(in)	(mm)	(gal)	(L)	(yd^3)	(m^3)	(ft)	(m)	(ft)	(m)
4	1.2	3.0	85	12	300	70	265	0.70	0.53	2.8	0.85	4.1	1.25
6	1.8	8.0	227	18	450	216	818	2.10	1.61	3.2	0.98	5.9	1.80
8	2.4	15.0	425	24	600	540	2,044	4.65	3.56	4.2	1.28	7.7	2.35
10	3.0	25.0	708	30	750	1,050	3,975	8.70	6.65	5.0	1.52	9.4	2.85
12*	3.7	38.0	1,076	36	900	1,770	6,700	14.70	11.24	5.6	1.71	11.2	3.41

*Not available in all areas. Contact Hydro International for details.

Hydro International, 94 Hutchins Drive, Portland, ME 04102
Tel: (207) 756-6200 Fax: (207) 756-6212
Email: stormwaterinquiry@hydro-int.com Web: www.hydro-int.com

JPHV-30000
HIGH VELOCITY
STORMWATER INTERCEPTOR

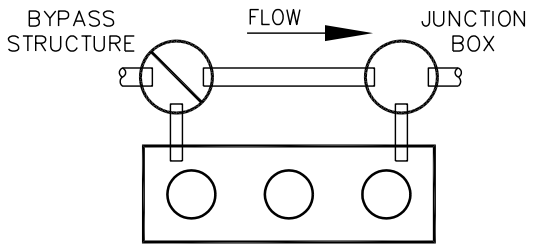

STORMWATER INTERCEPTOR
TYPICAL SYSTEM CONFIGURATION
(SEE NOTE 1)

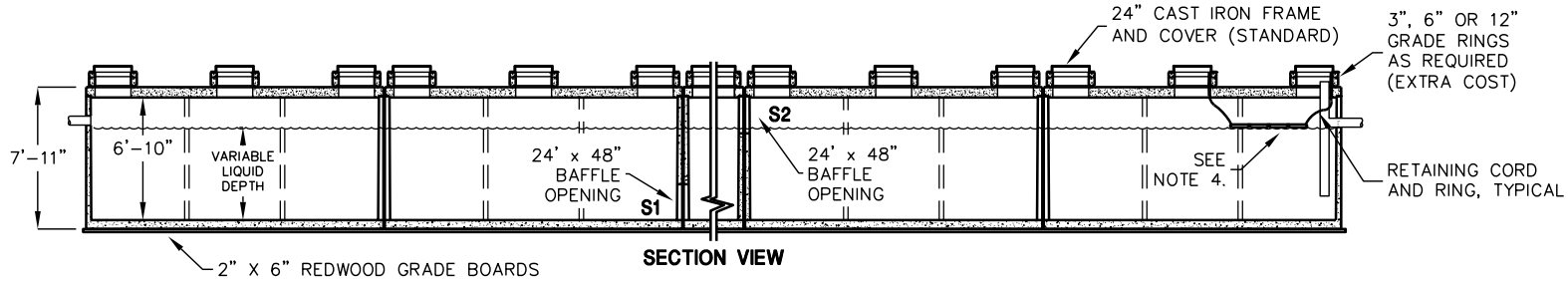

SECTION VIEW

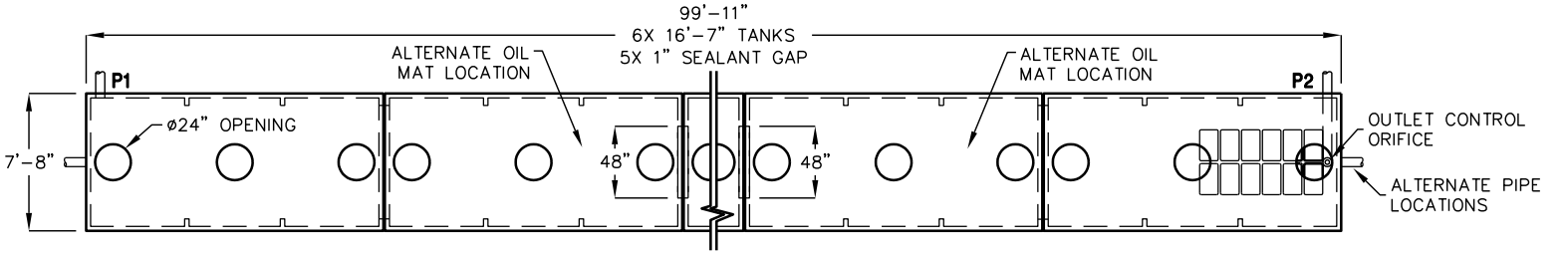

TOP VIEW
(COVERS & RISERS REMOVED)

JPHV-30000

SECTIONS	TOTAL TANK CAPACITY	MAXIMUM TREATMENT FLOW (CFS)	RECOMMENDED TREATMENT FLOW (CFS)	RECOMMENDED OUTLET BOX SIZE	RECOMMENDED MIN. NO. OF SORBENT MATS	TANK ACCESS COVERS REQUIRED
6xJPHV5000	34,947 GAL.	9.55	7.50	60"ø ROUND	12	18

NOTES:
1. BYPASS STRUCTURE AND JUNCTION BOX SHALL BE SIZED ACCORDING TO PIPE SIZES AND FLOW. ALTERNATIVE CONFIGURATIONS AVAILABLE, CONTACT JENSEN PRECAST FOR MORE INFORMATION.
2. BAFFLE OPENINGS (S1 & S2) SHALL BE SIZED ACCORDING TO FLOW.
3. ALL EXTERNAL PIPING TO BE SUPPLIED BY OTHERS.
4. OIL SORBENT MATS TO BE EQUIPPED WITH RETAINING CORD AND RING, SECURED TO OR UNDER FRAME AND COVER, FOR HAND ACCESS BY OTHERS.
5. DESIGN LOAD: H-20 TRAFFIC FROM 1' TO 4' OF COVER. FOR OTHER DEPTHS, SPECIAL LOADINGS, AND COMPLETE DESIGN INFORMATION, CONTACT JENSEN PRECAST.
6. MINIMUM GROSS TREATMENT HAZEN'S SURFACE AREA LOADING RATE (SALR) SHALL NOT BE GREATER THAN SIX (6) GALLONS PER MINUTE PER SQUARE FOOT. THE SALR SHALL BE CALCULATED BY DIVIDING THE TREATMENT FREE SURFACE AREA IN SQUARE FEET BY THE DESIGN FLOW RATE IN GALLONS PER MINUTE. NO EXCEPTIONS SHALL BE ALLOWED.

6/14/05
JPHV30000_C.dwg
© 2005 Jensen Precast

JENSEN PRECAST®

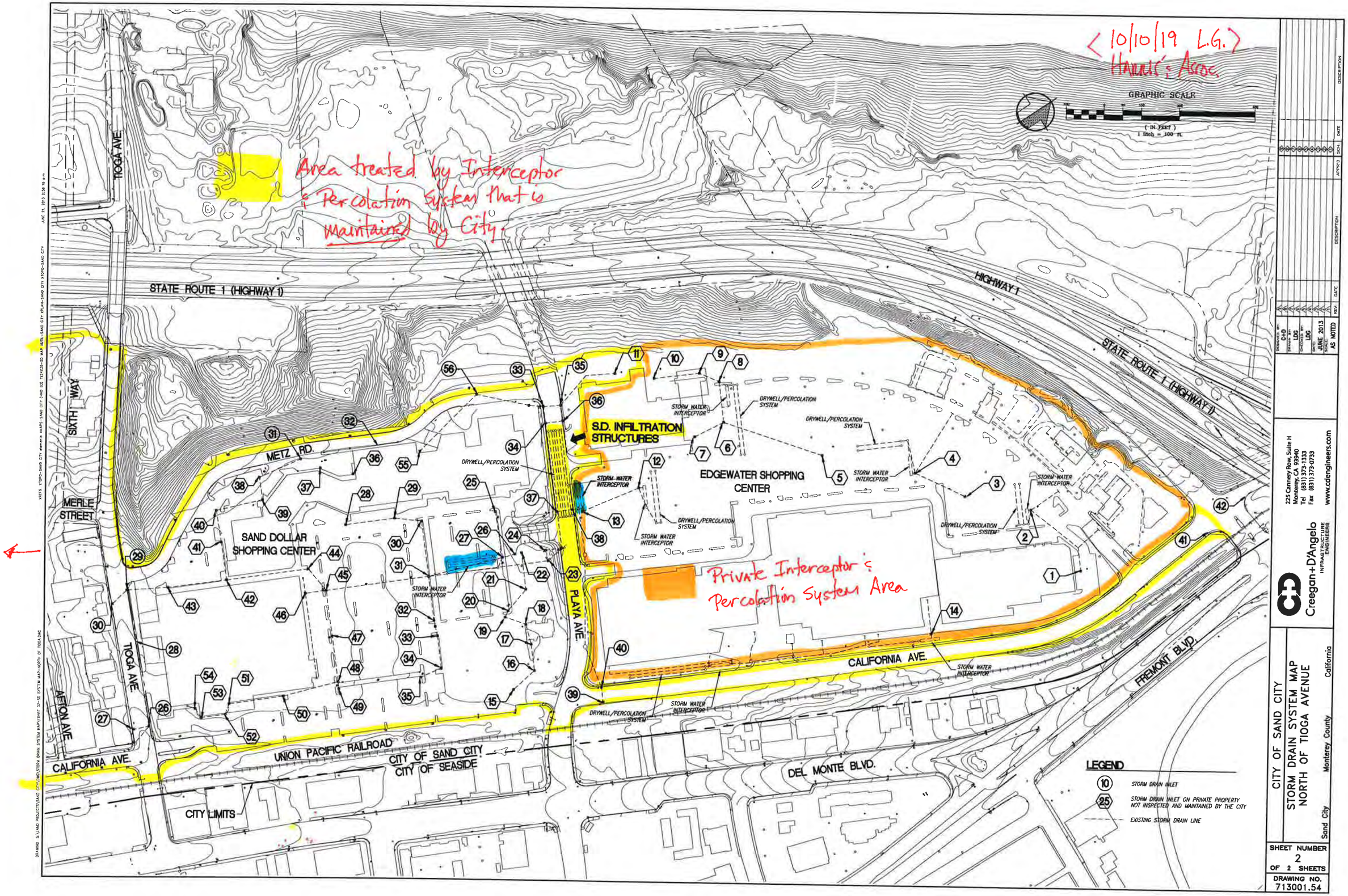

REV.	DATE	DESCRIPTION	APPR'D	SCH.	DATE	DESCRIPTION

DESIGNED BY: C-D
DRAWN BY: LDC
CHECKED BY: LDC
DATE: JUNE 2013
SCALE: AS NOTED

225 Cannery Row, Suite H
Monterey, CA 93940
Tel (831) 373-3333
Fax (831) 373-0733
www.cdengineers.com
Creegan+D'Angelo
INFRASTRUCTURE ENGINEERS

CITY OF SAND CITY
STORM DRAIN SYSTEM MAP NORTH OF TIOGA AVENUE

Sand City, Monterey County, California

SHEET NUMBER 2 OF 2 SHEETS

DRAWING NO. 713001.54

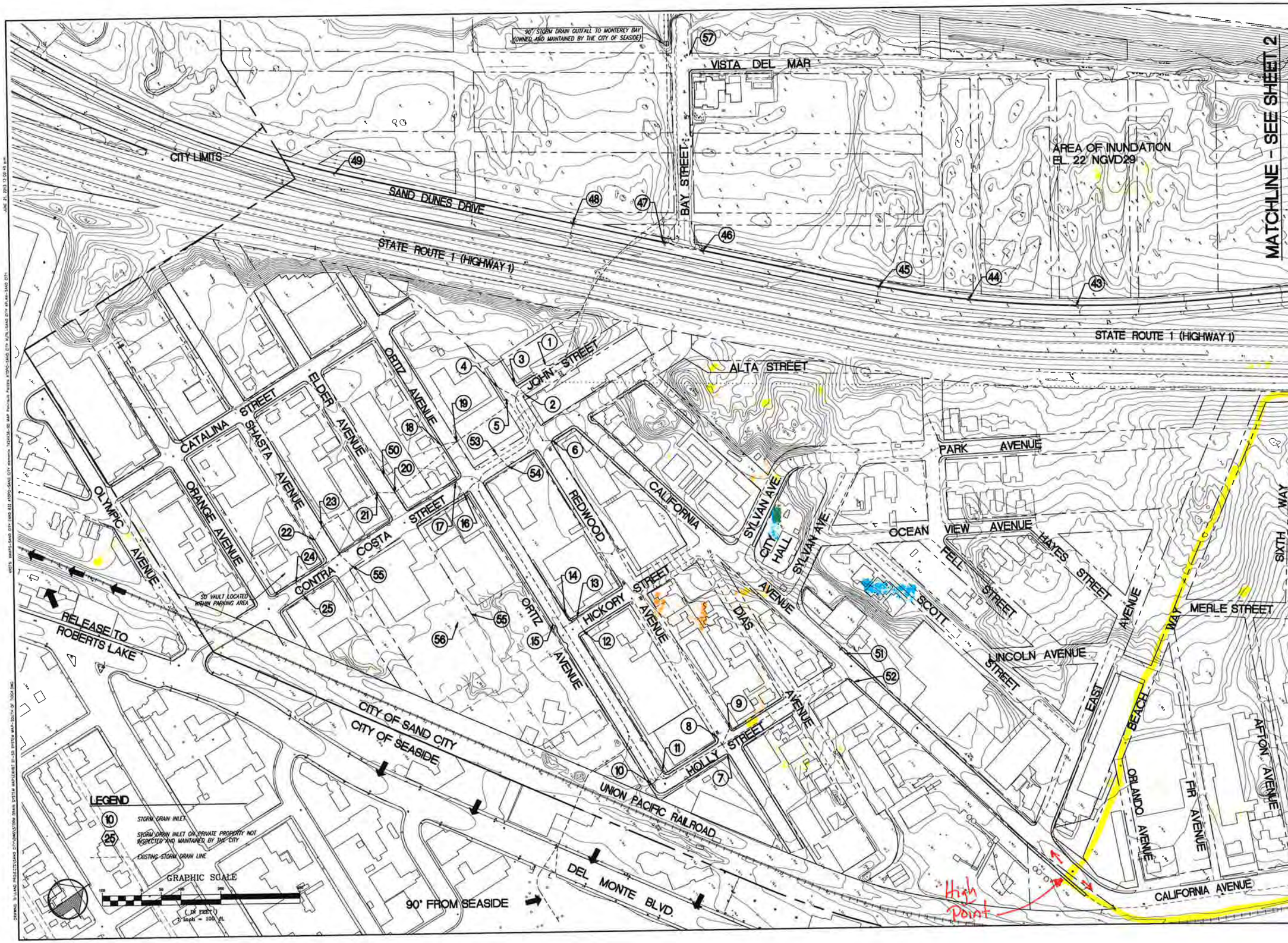

NO.	DATE	DESCRIPTION	NO.	DATE	DESCRIPTION

DESIGNED BY	CAD
DRAWN BY	LDG
CHECKED BY	LDG
DATE	JUNE 2013
SCALE	AS NOTED

225 Cannery Row, Suite H
Monterey, CA 93940
Tel (831) 373-1333
Fax (831) 373-0733
www.cdengineers.com
Creegan+D'Angelo
INFRASTRUCTURE ENGINEERS

CITY OF SAND CITY
STORM DRAIN SYSTEM MAP
SOUTH OF TIOGA

Sand City — Monterey County — California

SHEET NUMBER 1 OF 2 SHEETS

DRAWING NO. 713001.54

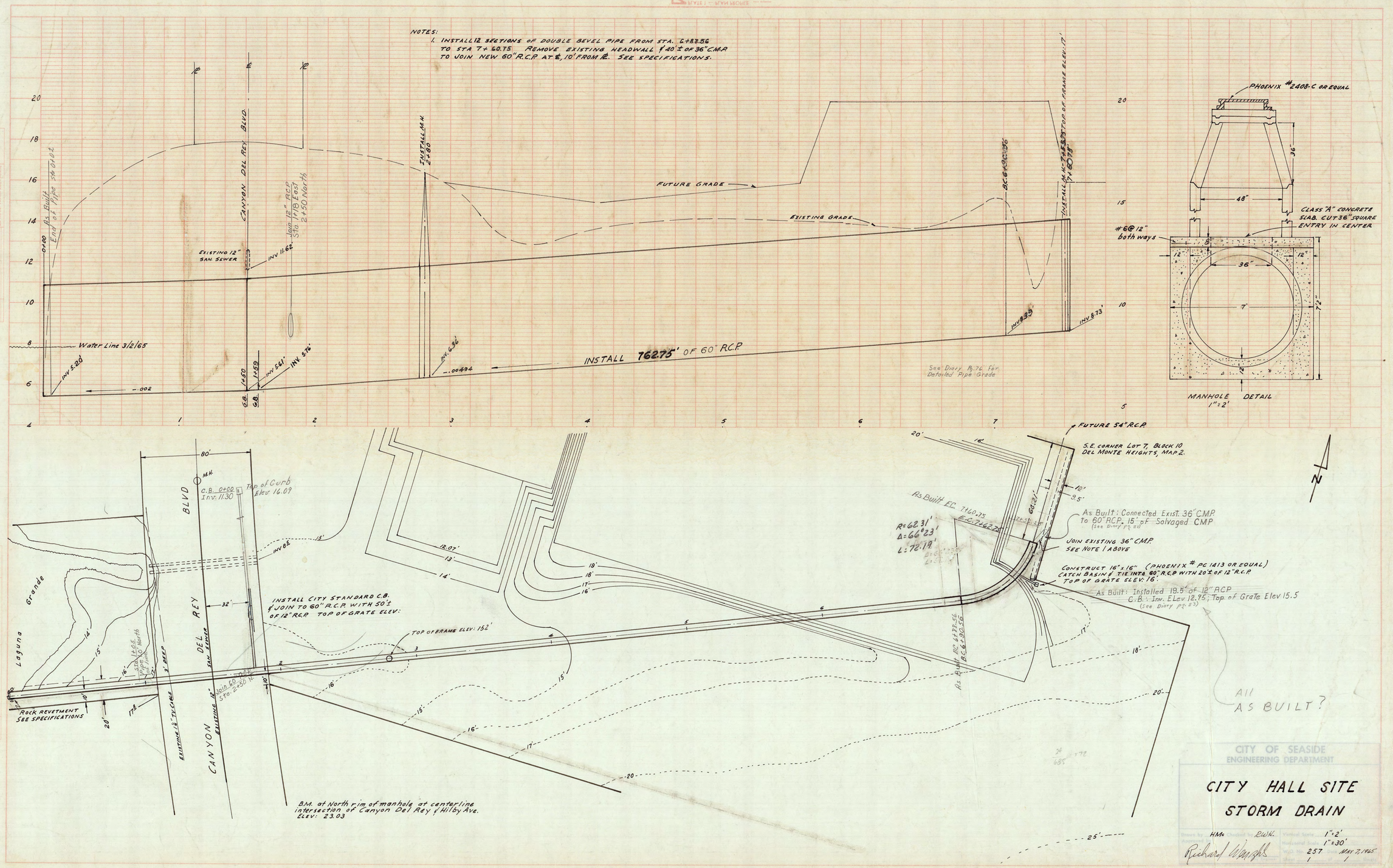

DRAWING NUMBER
PLAN HOLD CORPORATION • IRVINE, CALIFORNIA
RECORDER BY NUMBER 07-5AR

DRAWING NUMBER
PLAN HOLD CORPORATION • IRVINE, CALIFORNIA
RECORDER BY NUMBER 07-5AR

DRAWING NUMBER
PLAN HOLD CORPORATION • IRVINE, CALIFORNIA
RECORDER BY NUMBER 07-5AR

DRAWING NUMBER
SD-142
PLAN HOLD CORPORATION • IRVINE, CALIFORNIA
RECORDER BY NUMBER 07-5AR

Impervious Areas for the Auto Center

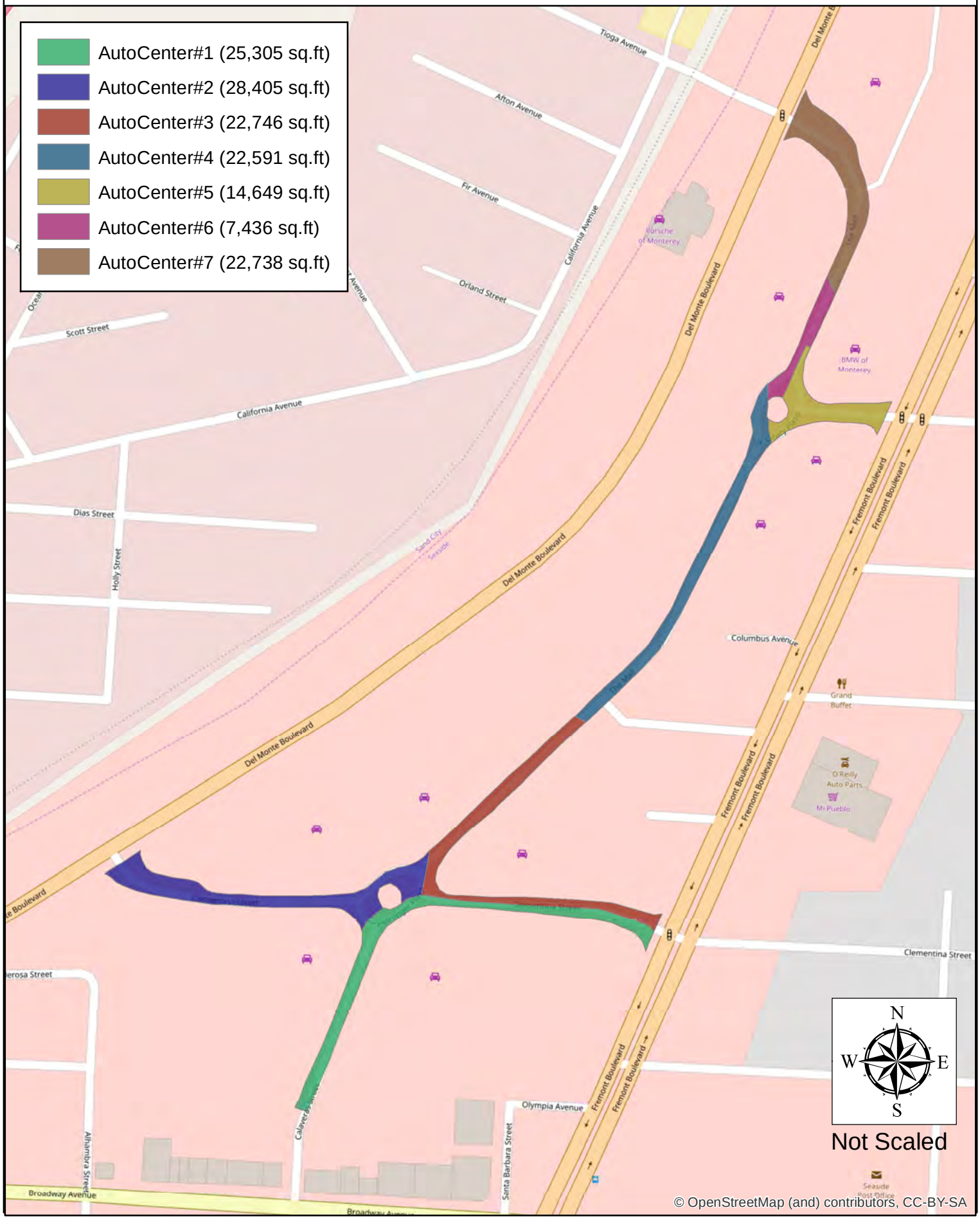

© OpenStreetMap (and) contributors, CC-BY-SA

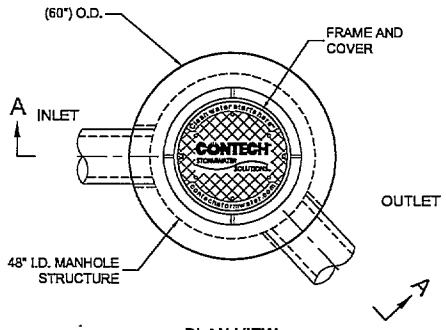

PLAN VIEW

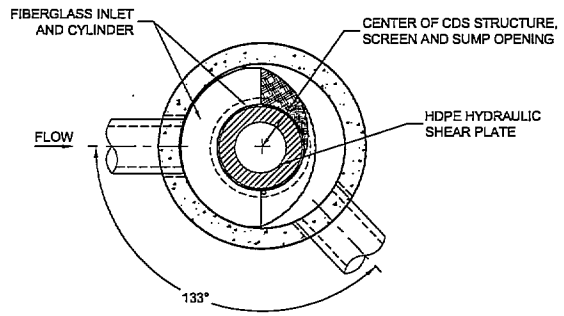

SECTION B-B

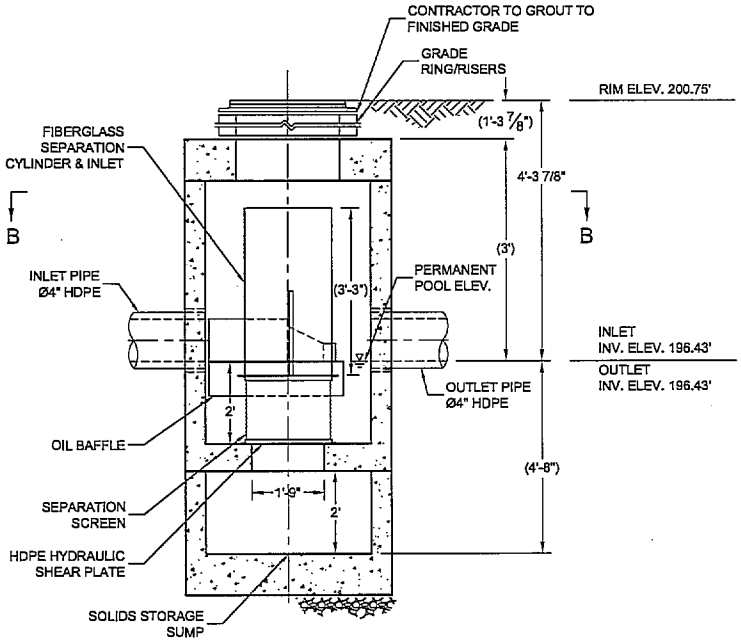

SECTION A-A

MATERIALS LIST - PROVIDED BY CONTECH

COUNT	DESCRIPTION	INSTALLED BY
1	FIBERGLASS INLET & CYLINDER	CONTECH
1	HYDRAULIC SHEER PLATE	CONTECH
1	2400 MICRON SEP. SCREEN	CONTECH
1	SEALANT FOR JOINTS	CONTRACTOR
-	GRADE RINGS/ RISERS	CONTRACTOR
1	Ø30" x 3.25" FRAME AND COVER	CONTRACTOR

SITE DESIGN DATA

WATER QUALITY FLOW RATE	0.45 cfs
PEAK FLOW RATE	0.45 cfs
RETURN PERIOD OF PEAK FLOW	10 yrs

GENERAL NOTES
1. CONTECH TO PROVIDE ALL MATERIALS UNLESS NOTED OTHERWISE.
2. DIMENSIONS MARKED WITH ( ) ARE REFERENCE DIMENSIONS. ACTUAL DIMENSIONS MAY VARY.
3. FOR FABRICATION DRAWINGS WITH DETAILED STRUCTURE DIMENSIONS AND WEIGHTS, PLEASE CONTACT YOUR CONTECH STORMWATER SOLUTIONS REPRESENTATIVE. www.contechstormwater.com
4. CDS WATER QUALITY STRUCTURE SHALL BE IN ACCORDANCE WITH ALL DESIGN DATA AND INFORMATION CONTAINED IN THIS DRAWING.
5. STRUCTURE AND CASTINGS SHALL MEET AASHTO H20 LOAD RATING.
6. HDPE HYDRAULIC SHEAR PLATE IS PLACED ON SHELF AT BOTTOM OF SCREEN CYLINDER. REMOVE AND REPLACE AS NECESSARY DURING MAINTENANCE CLEANING.

INSTALLATION NOTES
1. ANY SUB-BASE, BACKFILL DEPTH, AND/OR ANTI-FLOTATION PROVISIONS ARE SITE-SPECIFIC DESIGN CONSIDERATIONS AND SHALL BE SPECIFIED BY ENGINEER OF RECORD.
2. CONTRACTOR TO PROVIDE EQUIPMENT WITH SUFFICIENT LIFTING AND REACH CAPACITY TO LIFT AND SET THE CDS MANHOLE STRUCTURE (LIFTING CLUTCHES PROVIDED).
3. CONTRACTOR TO ADD JOINT SEALANT BETWEEN ALL STRUCTURE SECTIONS, AND ASSEMBLE STRUCTURE.
4. CONTRACTOR TO PROVIDE, INSTALL, AND GROUT PIPES. MATCH PIPE INVERTS WITH ELEVATIONS SHOWN.
5. CONTRACTOR TO TAKE APPROPRIATE MEASURES TO ASSURE UNIT IS WATER TIGHT, HOLDING WATER TO FLOWLINE INVERT MINIMUM. IT IS SUGGESTED THAT ALL JOINTS BELOW PIPE INVERTS ARE GROUTED.

STRUCTURE WEIGHT
APPROXIMATE HEAVIEST PICK = 7,500 LBS.

SUBMITTAL

THIS PRODUCT MAY BE PROTECTED BY ONE OR MORE OF THE FOLLOWING U.S. PATENTS: 5,788,848; 6,641,720; 6,511,595; 6,581,783; RELATED FOREIGN PATENTS, OR OTHER PATENTS PENDING.

CDS2015-4CDS2015-4- 37213-01
CITY OF SEASIDE FIRE STATION #1
SEASIDE, CA
SITE DESIGNATION: WQS

This drawing or electronic file is for the purpose of specifying stormwater treatment equipment to be furnished by CONTECH Stormwater Solutions (CSS). The black & white or colored representation of the CSS logo and the stormwater treatment system product designation and patent number, if applicable, may be deleted if necessary. Revisions to any part of this drawing, except as previously noted, without prior confirmation with CSS staff is considered unauthorized use of proprietary information.

CONTECH STORMWATER SOLUTIONS contechstormwater.com

BASE FILE NAME: CDS2015-4-SUB.DWG	
SCALE: NONE	
DESIGNED: KAS	DRAWN: N/A
DATE: 06/13/08	
REV:	

E:\STORMWATER\PROJECT\037300-37399\37213\DGN\DESIGN\AFTWDS\SUBMITTAL DRAWING\CDS\37213-01 CUD2015-4-SUB.DWG 6/26/2008 8:23 AM

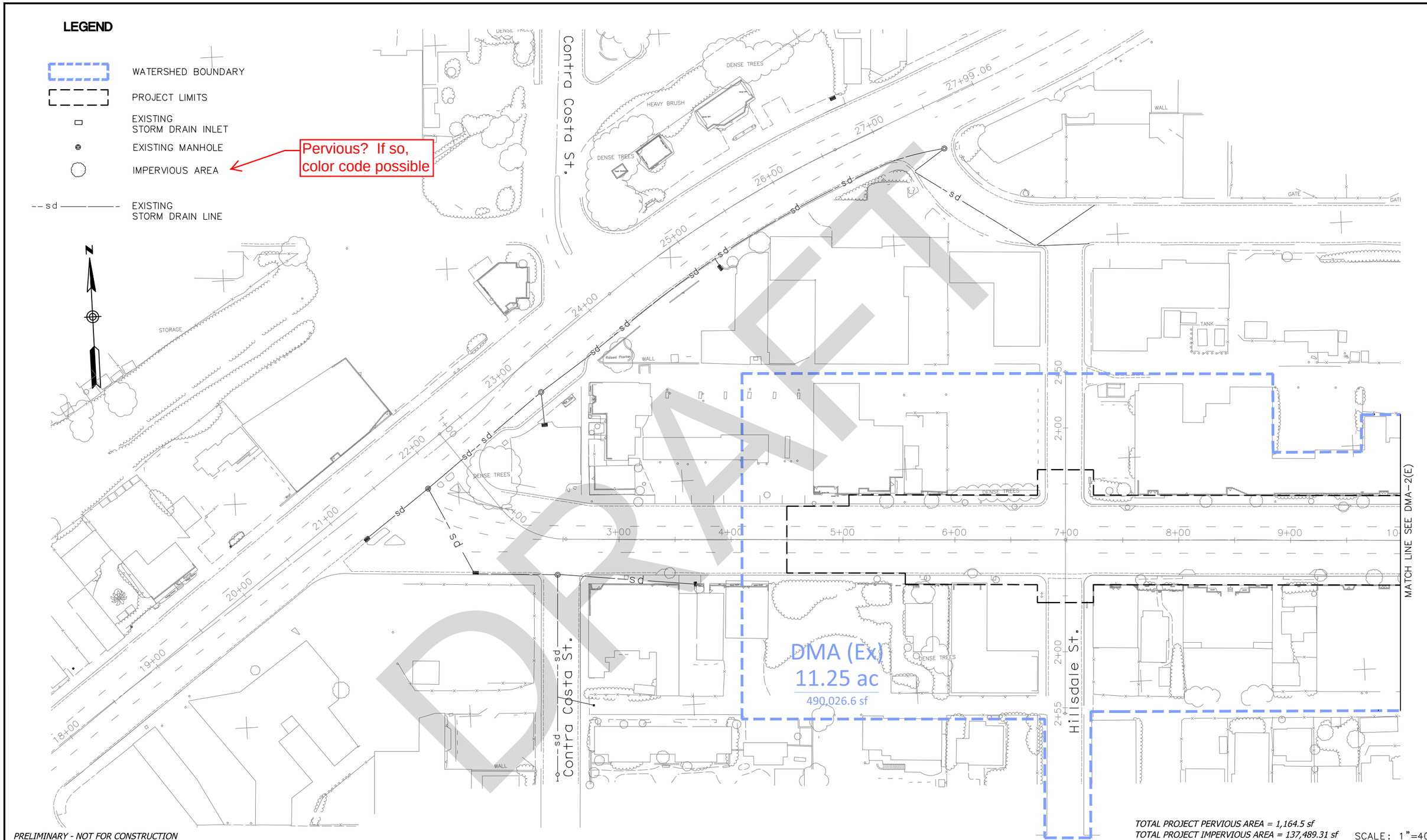

BAR LENGTH ON ORIGINAL DRAWING EQUALS ONE INCH – ADJUST SCALE ACCORDINGLY

NO.	DATE	DESCRIPTION	CITY APPROVAL	DATE
REVISIONS				

DESIGNED BY

DRAWN BY

CHECKED BY

CONSULTANT

MARK THOMAS & COMPANY, INC.
Providing Engineering, Surveying, and Planning Services
2290 North First Street, #304
San Jose, CA 95131
(408) 453-5373

SUBMITTED: _____

CITY OF SEASIDE, PUBLIC WORKS DIVISION
440 HARCOURT AVENUE
SEASIDE, CA 93955
(831) 899-6884

PROJECT
CITY OF SEASIDE
WEST BROADWAY URBAN VILLAGE
INFRASTRUCTURE IMPROVEMENTS PROJECT

SHEET
EXISTING DRAINAGE AREA

DATE 10/12/2016
SHEET 1 OF 2
DRAWING NO. **DMA-1(E)**
JOB NO. 2016-76

DWG Name: V:\Seaside-SJ-15125_West Broadway\CADD\Exhibits\SJ-15125 - Proposed DMA Exhibit - TAL.dwg Plotted by: tloyd on Oct 13, 2016 - 15:14:01

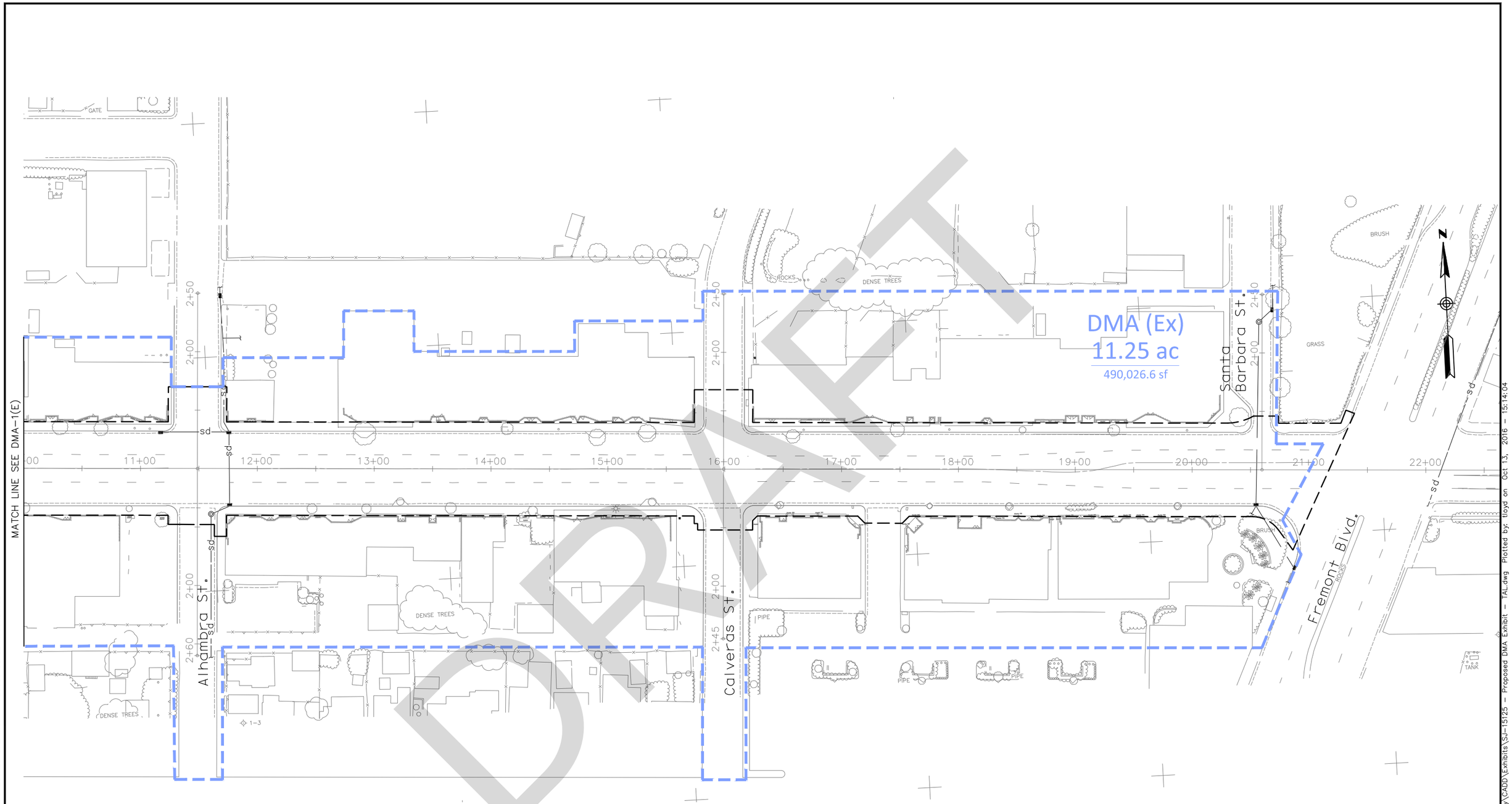

DRAFT

PRELIMINARY - NOT FOR CONSTRUCTION

TOTAL PROJECT PERVIOUS AREA = 1,164.5 sf
TOTAL PROJECT IMPERVIOUS AREA = 137,489.31 sf

SCALE: 1"=40'

BAR LENGTH ON ORIGINAL DRAWING EQUALS ONE INCH – ADJUST SCALE ACCORDINGLY

NO.	DATE	DESCRIPTION	CITY APPROVAL	DATE

REVISIONS

DESIGNED BY
DRAWN BY
CHECKED BY

CONSULTANT
MARK THOMAS & COMPANY, INC.
Providing Engineering, Surveying, and Planning Services
2290 North First Street, #304
San Jose, CA 95131
(408) 453-5373

SUBMITTED: _____

CITY OF SEASIDE, PUBLIC WORKS DIVISION
440 HARCOURT AVENUE
SEASIDE, CA 93955
(831) 899-6884

PROJECT
CITY OF SEASIDE
WEST BROADWAY URBAN VILLAGE
INFRASTRUCTURE IMPROVEMENTS PROJECT

SHEET
EXISTING DRAINAGE AREA

DATE 10/12/2016
SHEET 2 OF 2
DRAWING NO. **DMA-2(E)**
JOB NO. 2016-76

DWG Name: V:\Seaside-SJ-15125_West Broadway\CADD\Exhibits\SJ-15125 - Proposed DMA Exhibit - TAL.dwg Plotted by: lloyd on Oct 13, 2016 - 15:14:04

LEGEND

- WATERSHED BOUNDARY
- PROJECT LIMITS
- DIRECTION OF FLOW
- 4x6 TREE WELL
- 6X6 TREE WELL
- SCM

PERVIOUS		
	QTY	AREA (sf)
4x6 TREE WELL	78	1872
6X6 TREE WELL	27	972
SCM 1		405.20
SCM 2		329.30
SCM 3		130.10
SCM 4		129.80
SCM 5		129.60
SCM 6		406.40
SCM 7		405.80

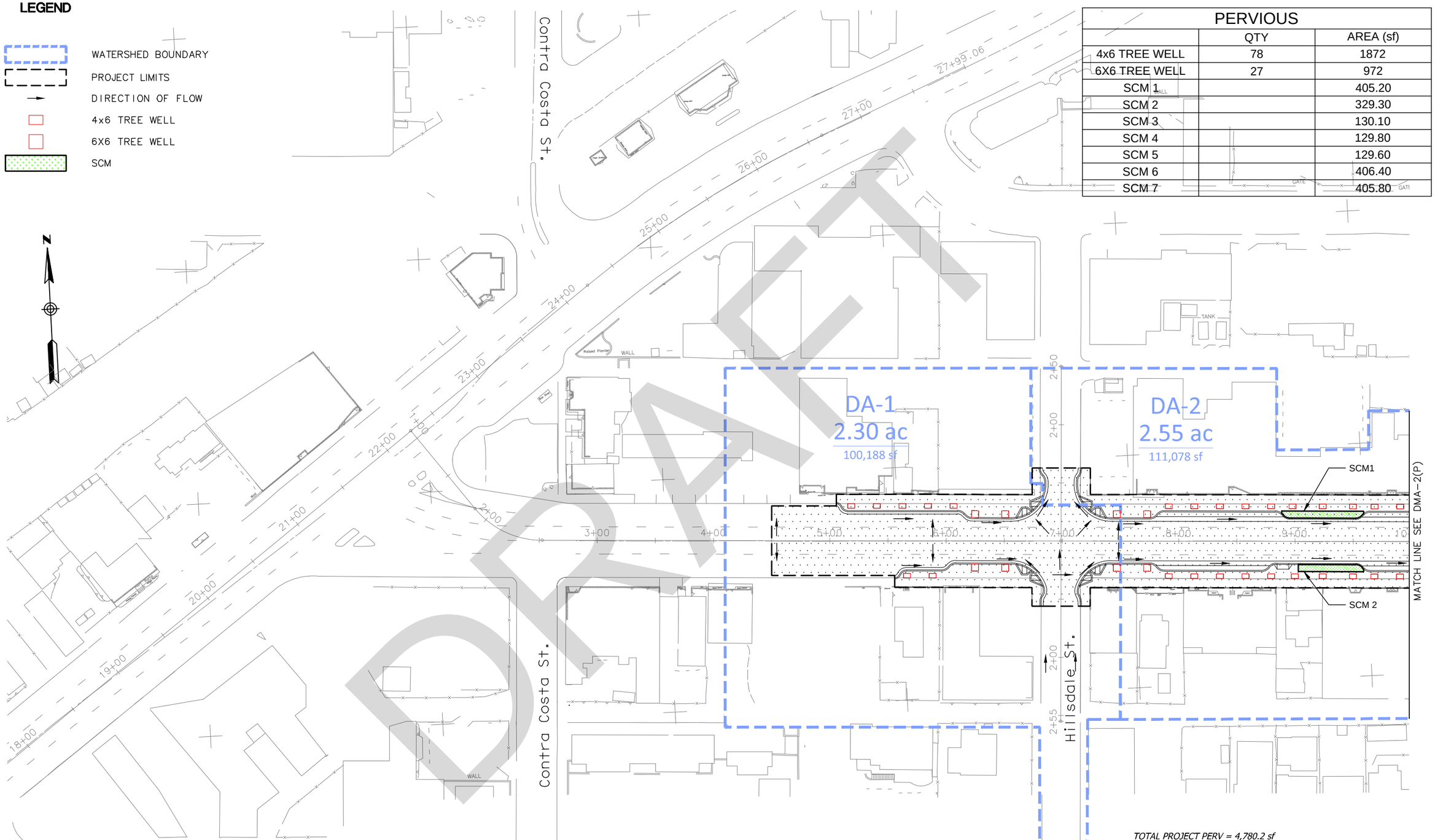

PRELIMINARY - NOT FOR CONSTRUCTION

TOTAL PROJECT PERV = 4,780.2 sf
TOTAL PROJECT IMP = 133,873.61 sf

SCALE: 1"=40'

NO.	DATE	DESCRIPTION	CITY APPROVAL	DATE
REVISIONS				

DESIGNED BY

DRAWN BY

CHECKED BY

CONSULTANT

MARK THOMAS & COMPANY, INC.
Providing Engineering, Surveying, and Planning Services
2290 North First Street, #304
San Jose, CA 95131
(408) 453-5373

SUBMITTED: _____

CITY OF SEASIDE, PUBLIC WORKS DIVISION
440 HARCOURT AVENUE
SEASIDE, CA 93955
(831) 899-6884

PROJECT
CITY OF SEASIDE
WEST BROADWAY URBAN VILLAGE
INFRASTRUCTURE IMPROVEMENTS PROJECT

SHEET
PROPOSED DRAINAGE AREA

DATE 10/12/2016
SHEET 1 OF 2
DRAWING NO. **DMA-1(P)**
JOB NO. 2016-76

BAR LENGTH ON ORIGINAL DRAWING EQUALS ONE INCH - ADJUST SCALE ACCORDINGLY

DWG Name: Y:\Seaside-SJ-15125_West Broadway\CADD\Exhibits\SJ-15125 - Proposed DMA Exhibit - TAL.dwg Plotted by: jinguez on Oct 12, 2016 - 17:54:37

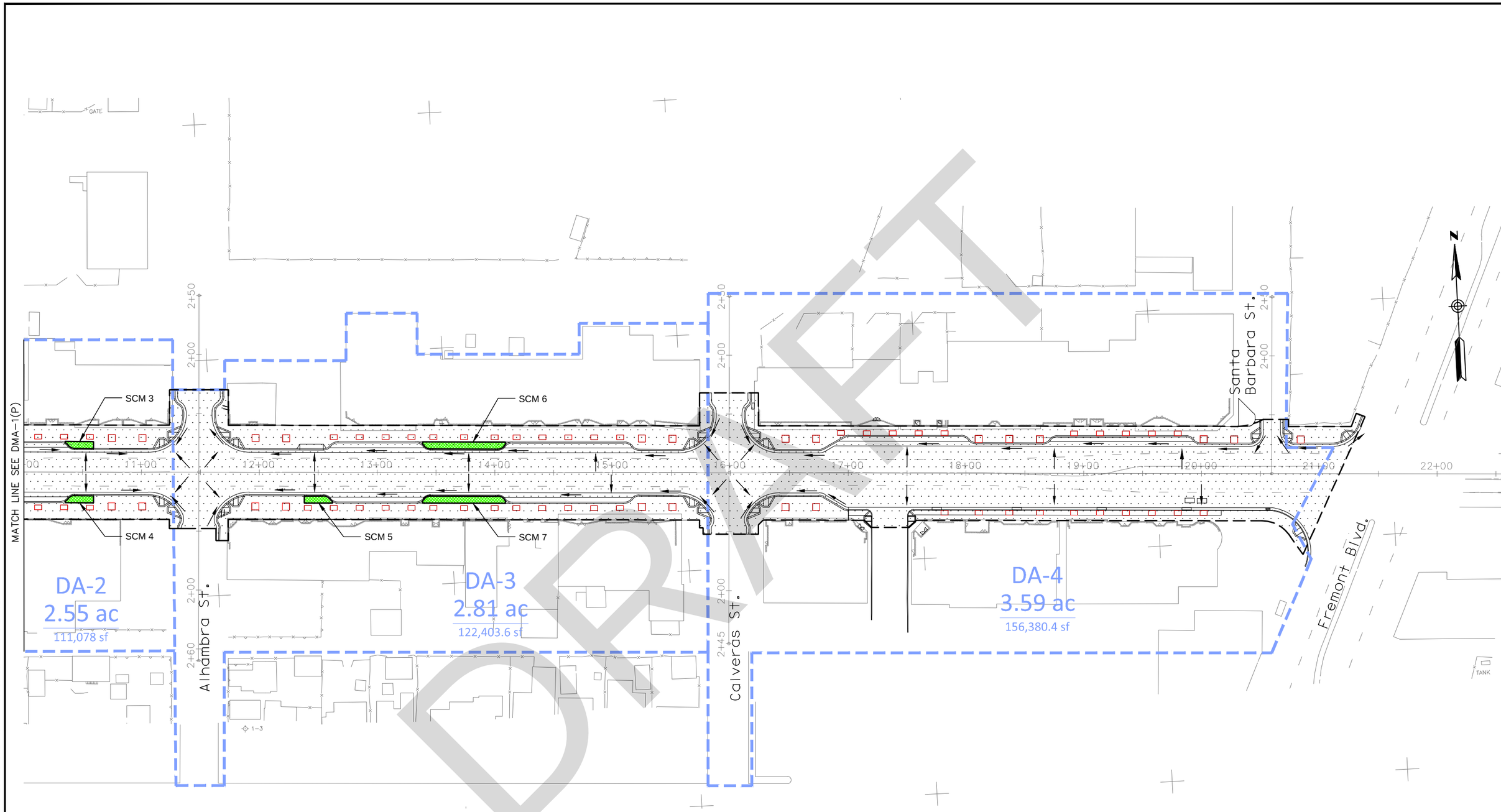

DRAFT

PRELIMINARY - NOT FOR CONSTRUCTION

TOTAL PROJECT PERV = 4,780.2 sf
TOTAL PROJECT IMP = 133,873.61 sf

SCALE: 1"=40'

BAR LENGTH ON ORIGINAL DRAWING EQUALS ONE INCH – ADJUST SCALE ACCORDINGLY

NO.	DATE	DESCRIPTION	CITY APPROVAL	DATE

REVISIONS

DESIGNED BY
DRAWN BY
CHECKED BY

CONSULTANT
MARK THOMAS & COMPANY, INC.
Providing Engineering, Surveying, and Planning Services
2290 North First Street, #304
San Jose, CA 95131
(408) 453-5373

SUBMITTED: _____

CITY OF SEASIDE, PUBLIC WORKS DIVISION
440 HARCOURT AVENUE
SEASIDE, CA 93955
(831) 899-6884

PROJECT
CITY OF SEASIDE
WEST BROADWAY URBAN VILLAGE
INFRASTRUCTURE IMPROVEMENTS PROJECT

SHEET
PROPOSED DRAINAGE AREA

DATE 10/12/2016
SHEET 2 OF 2
DRAWING NO. **DMA-2(P)**
JOB NO. 2016-76

DWG Name: V:\Seaside-SJ-15125_West Broadway\CADD\Exhibits\SJ-15125 - Proposed DMA Exhibit - TAL.dwg Plotted by: jniguez on Oct 12, 2016 - 17:54:40

LEGEND

- PROPOSED STORM DRAIN INLET
- EXISTING STORM DRAIN INLET
- MANHOLE
- EXISTING MANHOLE
- HDS HYDRODYNAMIC SEPARATOR DEVICE
- /// REMOVE OR ABANDON
- PROPOSED STORM DRAIN LINE
- INFILTRATION TRENCH
- WATERSHED BOUNDARY

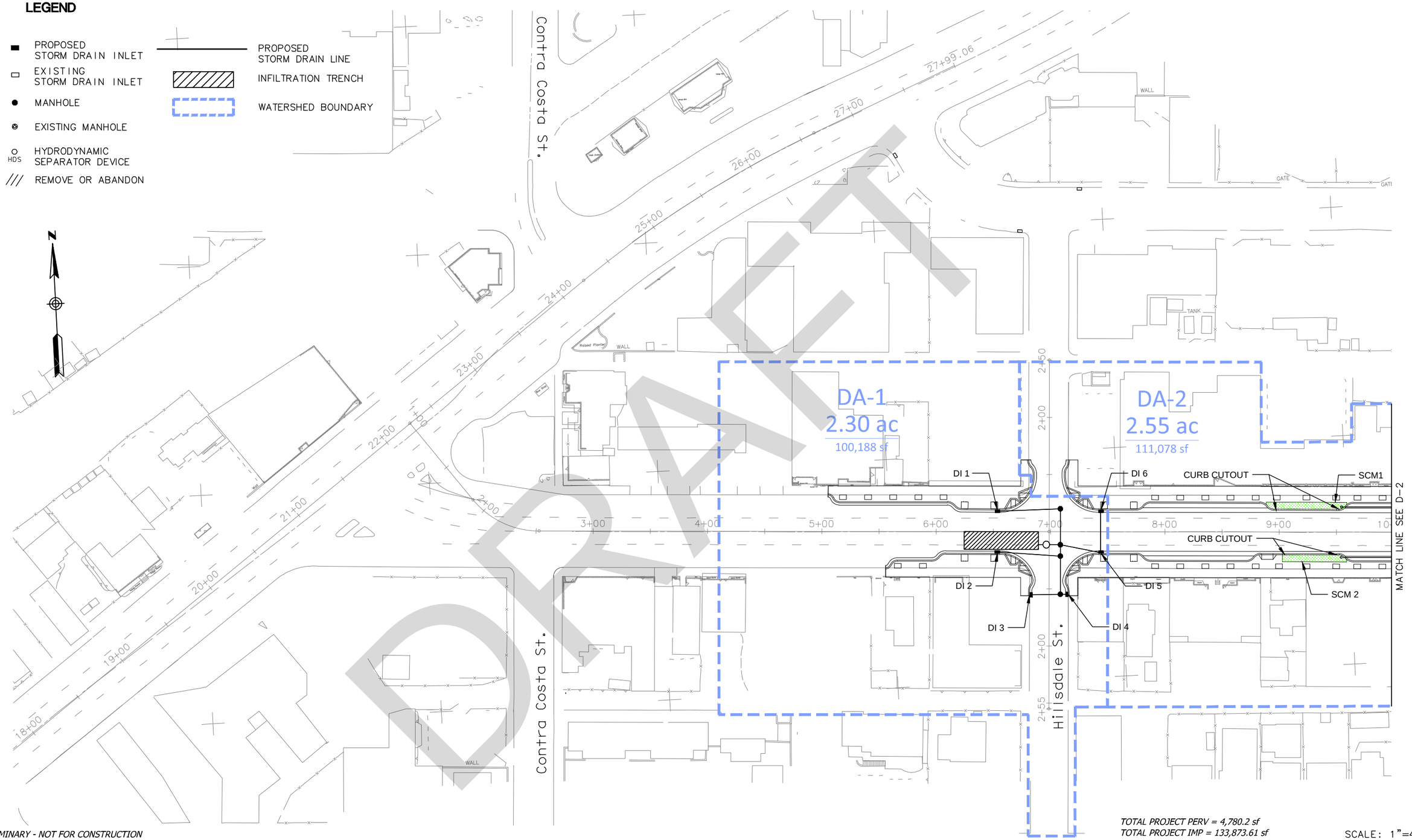

DRAFT

PRELIMINARY - NOT FOR CONSTRUCTION

TOTAL PROJECT PERV = 4,780.2 sf
TOTAL PROJECT IMP = 133,873.61 sf

SCALE: 1"=40'

BAR LENGTH ON ORIGINAL DRAWING EQUALS ONE INCH – ADJUST SCALE ACCORDINGLY

NO.	DATE	DESCRIPTION	CITY APPROVAL	DATE
REVISIONS				

DESIGNED BY

DRAWN BY

CHECKED BY

CONSULTANT

MARK THOMAS & COMPANY, INC.
Providing Engineering, Surveying, and Planning Services
2290 North First Street, #304
San Jose, CA 95131
(408) 453-5373

SUBMITTED: _____

CITY OF SEASIDE, PUBLIC WORKS DIVISION
440 HARCOURT AVENUE
SEASIDE, CA 93955
(831) 899-6884

PROJECT
CITY OF SEASIDE
WEST BROADWAY URBAN VILLAGE
INFRASTRUCTURE IMPROVEMENTS PROJECT

SHEET
PROPOSED DRAINAGE SYSTEM

DATE 10/12/2016
SHEET 1 OF 2
DRAWING NO. D-1
JOB NO. 2016-76

DWG Name: V:\Seaside-SJ-15125_West Broadway\CADD\Exhibits\SJ-15125 - Proposed DMA Exhibit - TAL.dwg Plotted by: jinguez on Oct 12, 2016 - 17:54:42

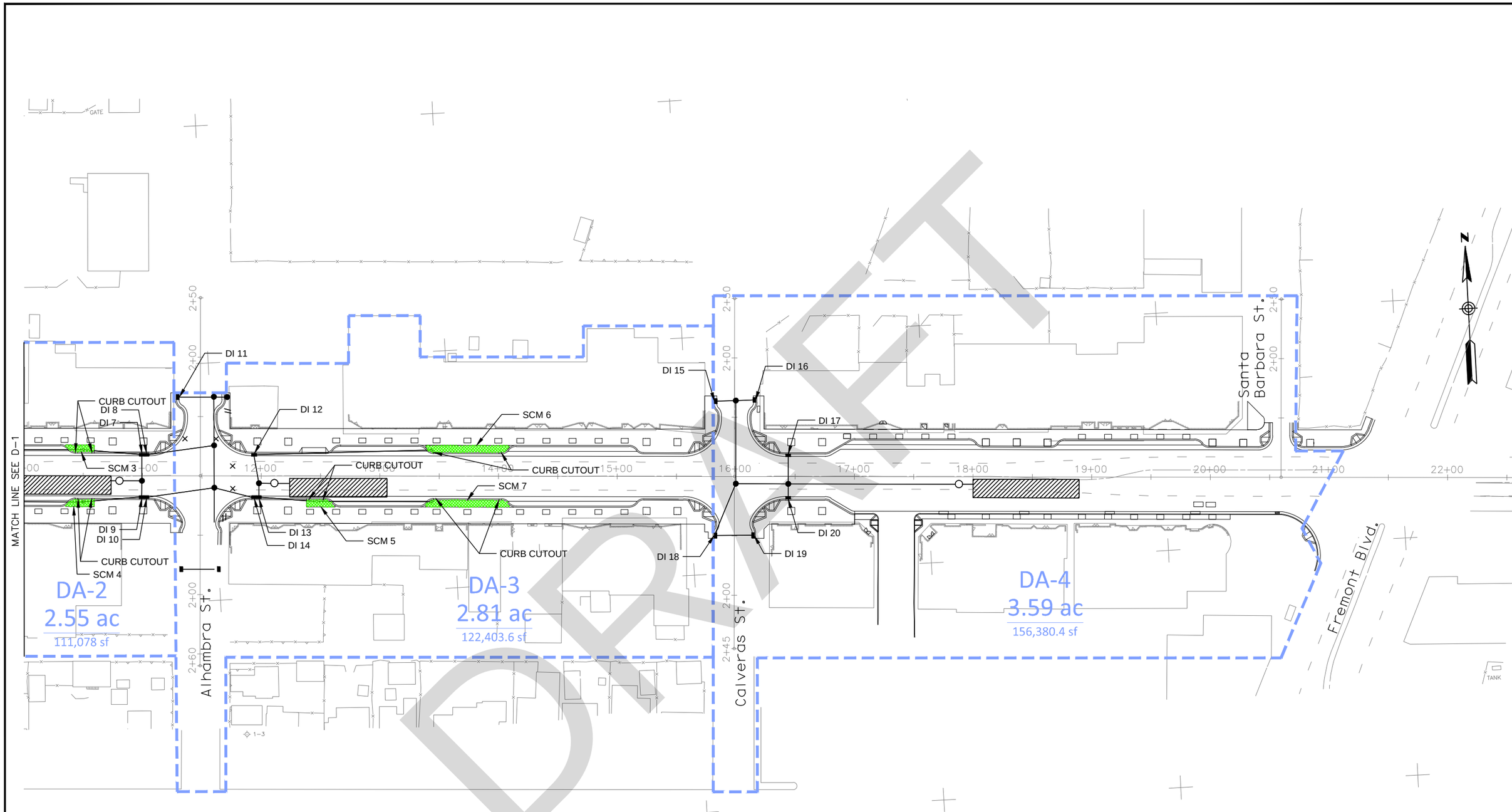

DRAFT

PRELIMINARY - NOT FOR CONSTRUCTION

TOTAL PROJECT PERV = 4,780.2 sf
TOTAL PROJECT IMP = 133,873.61 sf

SCALE: 1"=40'

BAR LENGTH ON ORIGINAL DRAWING EQUALS ONE INCH – ADJUST SCALE ACCORDINGLY

NO.	DATE	DESCRIPTION	CITY APPROVAL	DATE

REVISIONS

DESIGNED BY
DRAWN BY
CHECKED BY

CONSULTANT

MARK THOMAS & COMPANY, INC.
Providing Engineering, Surveying, and Planning Services
2290 North First Street, #304
San Jose, CA 95131
(408) 453-5373

SUBMITTED: _____

CITY OF SEASIDE, PUBLIC WORKS DIVISION
440 HARCOURT AVENUE
SEASIDE, CA 93955
(831) 899-6884

PROJECT
CITY OF SEASIDE
WEST BROADWAY URBAN VILLAGE
INFRASTRUCTURE IMPROVEMENTS PROJECT

SHEET
PROPOSED DRAINAGE SYSTEM

DATE 10/12/2016
SHEET 2 OF 2
DRAWING NO. **D-2**
JOB NO. 2016-76

DWG Name: V:\Seaside-SJ-15125_West Broadway\CADD\Exhibits\SJ-15125 – Proposed DMA Exhibit – TAL.dwg Plotted by: jiniguez on Oct 12, 2016 – 17:54:45

LEGEND

- WATERSHED BOUNDARY
- TRASH
- BENCH
- BIKE RACK

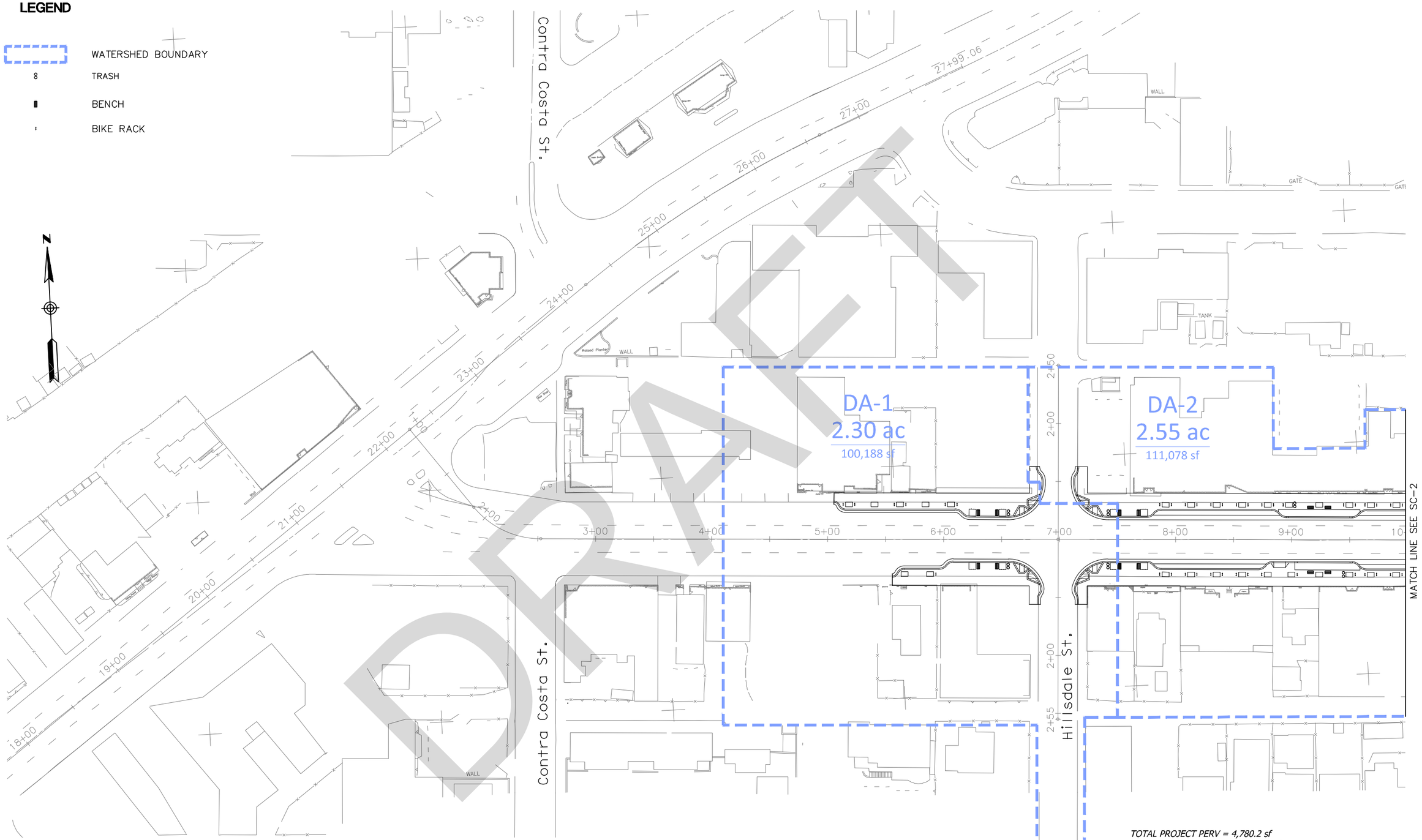

PRELIMINARY - NOT FOR CONSTRUCTION

TOTAL PROJECT PERV = 4,780.2 sf
TOTAL PROJECT IMP = 133,873.61 sf

SCALE: 1"=40'

BAR LENGTH ON ORIGINAL DRAWING EQUALS ONE INCH – ADJUST SCALE ACCORDINGLY

NO.	DATE	DESCRIPTION	CITY APPROVAL	DATE
REVISIONS				

DESIGNED BY

DRAWN BY

CHECKED BY

CONSULTANT

MARK THOMAS & COMPANY, INC.
Providing Engineering, Surveying, and Planning Services
2290 North First Street, #304
San Jose, CA 95131
(408) 453-5373

SUBMITTED: _____

CITY OF SEASIDE, PUBLIC WORKS DIVISION
440 HARCOURT AVENUE
SEASIDE, CA 93955
(831) 899-6884

PROJECT
CITY OF SEASIDE
WEST BROADWAY URBAN VILLAGE
INFRASTRUCTURE IMPROVEMENTS PROJECT

SHEET
PROPOSED SOURCE CONTROL EXHIBIT

DATE 10/12/2016
SHEET 1 OF 2
DRAWING NO. **SC-1**
JOB NO. 2016-76

DWG Name: V:\Seaside-SJ-15125_West Broadway\CADD\Exhibits\SJ-15125 - Proposed DMA Exhibit - TAL.dwg Plotted by jinguez on Oct 12, 2016 - 17:54:48

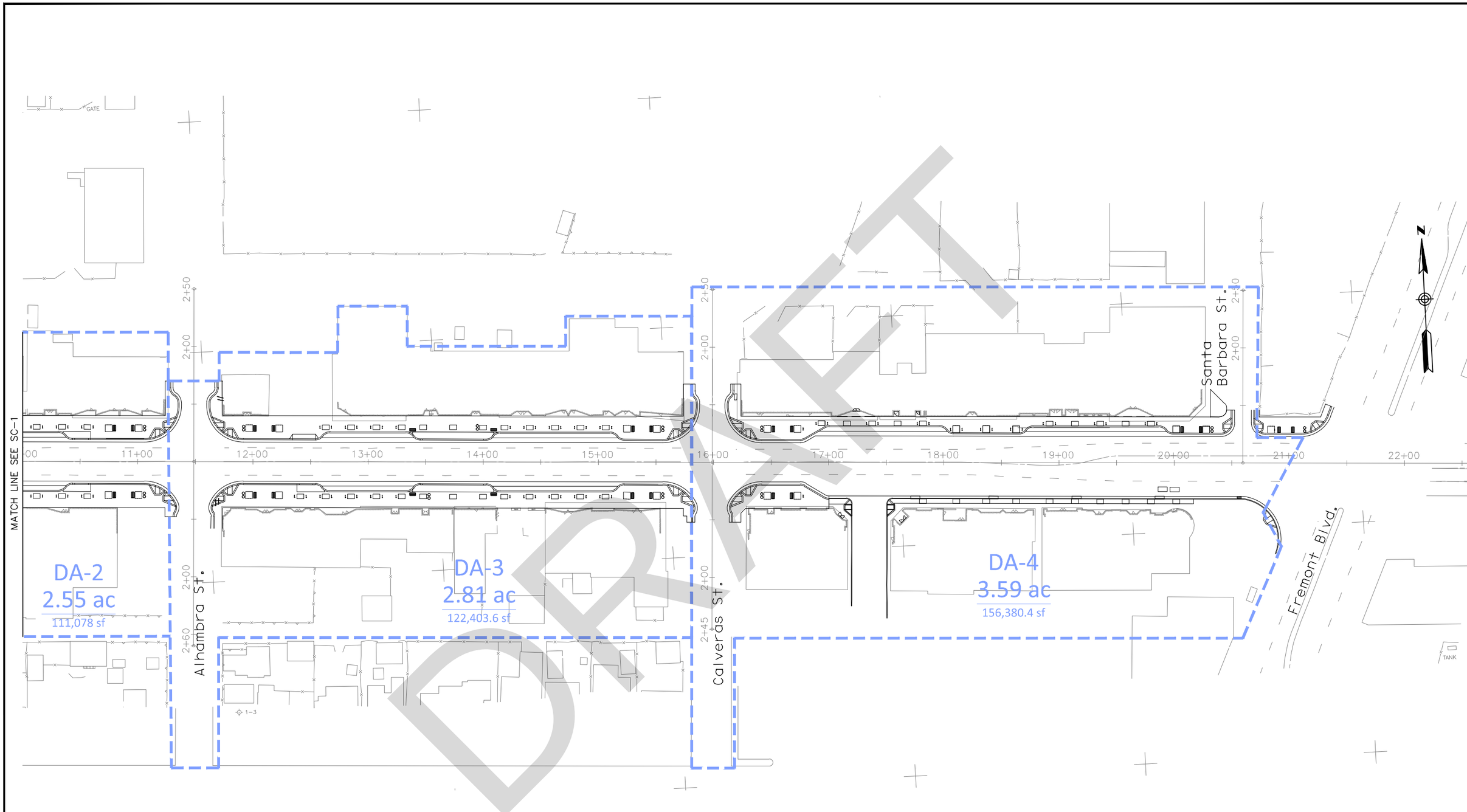

DRAFT

PRELIMINARY - NOT FOR CONSTRUCTION

TOTAL PROJECT PERV = 4,780.2 sf
TOTAL PROJECT IMP = 133,873.61 sf

SCALE: 1"=40'

NO.	DATE	DESCRIPTION	CITY APPROVAL	DATE

REVISIONS

DESIGNED BY
DRAWN BY
CHECKED BY

CONSULTANT

MARK THOMAS & COMPANY, INC.
Providing Engineering, Surveying, and Planning Services
2290 North First Street, #304
San Jose, CA 95131
(408) 453-5373

SUBMITTED: _____

CITY OF SEASIDE, PUBLIC WORKS DIVISION
440 HARCOURT AVENUE
SEASIDE, CA 93955
(831) 899-6884

PROJECT
CITY OF SEASIDE
WEST BROADWAY URBAN VILLAGE
INFRASTRUCTURE IMPROVEMENTS PROJECT

SHEET
PROPOSED SOURCE CONTROL EXHIBIT

DATE 10/12/2016
SHEET 2 OF 2
DRAWING NO. **SC-2**
JOB NO. 2016-76

BAR LENGTH ON ORIGINAL DRAWING EQUALS ONE INCH – ADJUST SCALE ACCORDINGLY

DWG Name: V:\Seaside-SJ-15125_West Broadway\CADD\Exhibits\SJ-15125 – Proposed DMA Exhibit – TAL.dwg Plotted by: jniguez on Oct 12, 2016 – 17:54:50

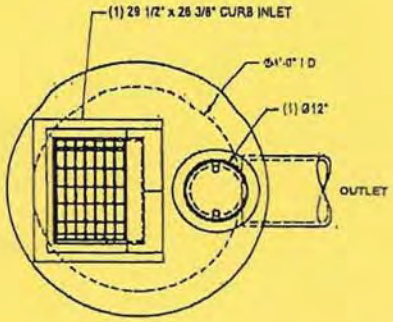

PLAN VIEW

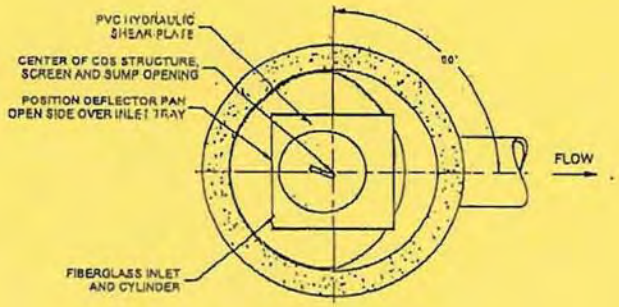

SECTION A-A

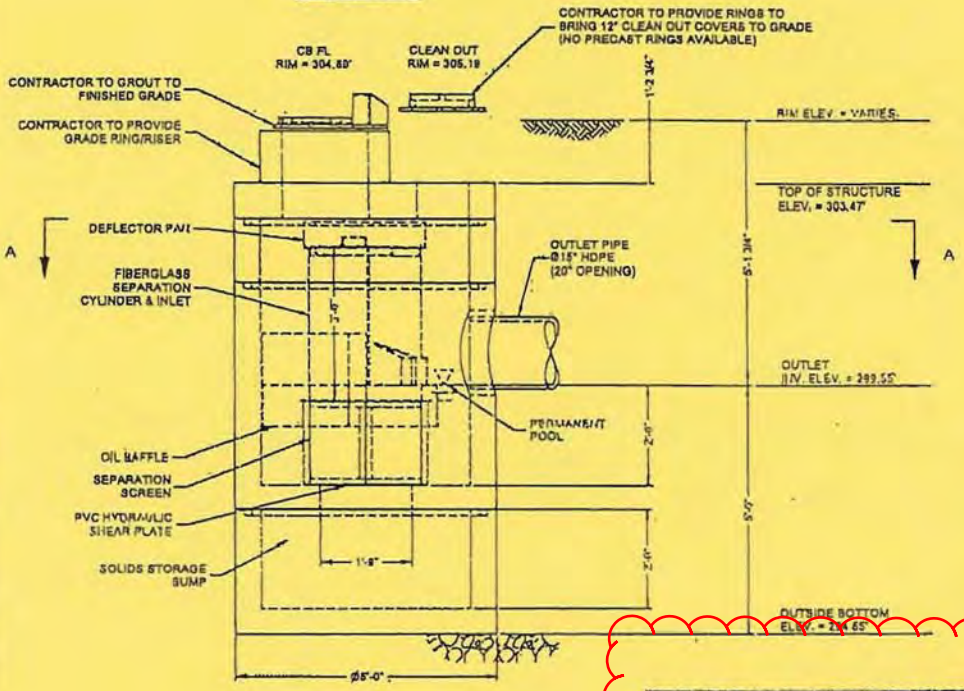

ELEVATION VIEW

OR APPROVED EQUAL

Sheet X1.2, Curb Inlet Detail, dated July 10, 2014

MATERIAL LIST - PROVIDED BY CONTECH

COUNT	DESCRIPTION	INSTALLED BY
1	FIBERGLASS INLET AND CYLINDER	CONTECH
1	2400 micron, 2 13' O.D. x 1 67' SEP. SCREEN	CONTECH
1	DEFLECTOR PAN	CONTRACTOR
1	3/16 INCH PVC HYDRAULIC SHEAR PLATE	CONTECH
1	SEALANT FOR JOINTS	CONTRACTOR
1	Ø12" x 4" EJ 541610201, OR EQUIVALENT	CONTRACTOR
1	29 1/2" x 26 3/8" CURB INLET, D&L I-3532	CONTRACTOR

SITE DESIGN DATA

WATER QUALITY FLOW RATE	0.7 CFS
PEAK FLOW RATE	1 CFS
RETURN PERIOD OF PEAK FLOW	100 YRS

GENERAL NOTES
1. CONTECH TO PROVIDE ALL MATERIALS UNLESS NOTED OTHERWISE.
2. FOR FABRICATION DRAWINGS WITH DETAILED STRUCTURE DIMENSIONS AND WEIGHT, PLEASE CONTACT YOUR CONTECH ENGINEERED SOLUTIONS LLC REPRESENTATIVE. www.ContechES.com
3. CDS WATER QUALITY STRUCTURE SHALL BE IN ACCORDANCE WITH ALL DESIGN DATA AND INFORMATION CONTAINED IN THIS DRAWING.
4. STRUCTURE SHALL MEET AASHTO HS-20 LOAD RATING. ASSUMING EARTH COVER OF 0' - 6', AND GROUNDWATER ELEVATION AT, OR BELOW, THE OUTLET PIPE INVERT ELEVATION. ENGINEER OF RECORD TO CONFIRM ACTUAL GROUNDWATER ELEVATION. CASTINGS SHALL MEET AASHTO M306 AND BE CAST WITH THE CONTECH LOGO
5. IF REQUIRED, PVC HYDRAULIC SHEAR PLATE IS PLACED ON SHELF AT BOTTOM OF SCREEN CYLINDER. REMOVE AND REPLACE AS NECESSARY DURING MAINTENANCE CLEANING.
6. CDS STRUCTURE SHALL BE PRECAST CONCRETE CONFORMING TO ASTM C-478 AND AASHTO LOAD FACTOR DESIGN METHOD

INSTALLATION NOTES
A. ANY SUB-BASE, BACKFILL DEPTH, AND/OR ANTI-FLOTATION PROVISIONS ARE SITE-SPECIFIC DESIGN CONSIDERATIONS AND SHALL BE SPECIFIED BY ENGINEER OF RECORD.
B. CONTRACTOR TO PROVIDE EQUIPMENT WITH SUFFICIENT LIFTING AND REACH CAPACITY TO LIFT AND SET THE CDS MANHOLE STRUCTURE
C. CONTRACTOR TO INSTALL JOINT SEALANT BETWEEN ALL STRUCTURE SECTIONS AND ASSEMBLE STRUCTURE
D. CONTRACTOR TO PROVIDE, INSTALL, AND GROUT PIPES. MATCH PIPE INVERTS WITH ELEVATIONS SHOWN. ALL PIPE CENTERLINES TO MATCH PIPE OPENING CENTERLINES.
E. CONTRACTOR TO TAKE APPROPRIATE MEASURES TO ASSURE UNIT IS WATER TIGHT, HOLDING WATER TO FLOWLINE INVERT MINIMUM. IT IS SUGGESTED THAT ALL JOINTS BELOW PIPE INVERTS ARE GROUTED.

STRUCTURE WEIGHT
APPROXIMATE HEAVIEST PICK = 6000 LBS
STRUCTURE IS DELIVERED IN 4 PIECES

MAX FOOTPRINT - 5'

CONTECH
CONTRACT
DRAWING

PRECN
2015-4-FGIS
1207/PR60127

NO.	DATE	REVISION DESCRIPTION	BY

CDS2015-4-C - 505469-10
CALIFORNIA CENTRAL COAST
VETERANS CEMETERY
SEASIDE, CA

CONTECH ENGINEERED SOLUTIONS LLC

CDS

DATE 7/10/14	SCALE
DRAWING JSF	DRAWN ASB
CHECKED N/A	APPROVED JSF
PROJECT NUMBER 505469	
SHEET 1 OF 1	

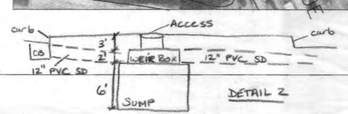

DETAIL 2

AS - BUILT

JH	1/12/99	

LEGEND

- (E) Catch Basin
- (N) Stormwater Oil Separator
- (N) Drain
- (E) 600 mm (24") Storm Drain Line
- (E) Electric
- (E) Gas
- (E) Sanitary Sewer
- (E) Water
- (N) 305 mm (12") Storm Drain Line

NOTES

1. Unit #1– 2.74 acres
   Stormceptor Model 3600 or approved equal
   Surface Grade = 2.29 m (7.5 ft)
   Inlet Pipe Invert = 1.30 m (4.27 ft)
   Outlet Pipe Invert = 1.27 m (4.18 ft)
   Pipe Diameter = 305 mm (12 inches)
   Approximate excavation depth = 4.69 m (15.4 ft)

2. Unit #2– 2.25 acres
   Stormceptor Model 3600 or approved equal
   Surface Grade = 2.59 m (8.5 ft)
   Inlet Pipe Invert = 0.61 m (2.0 ft)
   Outlet Pipe Invert = 0.58 m (1.91 ft)
   Pipe Diameter = 305 mm (12 inches)
   Approximate excavation depth = 5.7 m (18.67 ft)

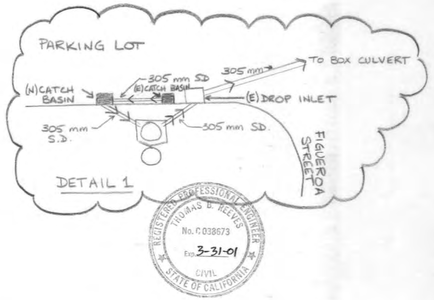

METRIC

CITY OF MONTEREY DEPARTMENT OF PUBLIC WORKS			
DESIGNED BY: JAH	STORMWATER OIL SEPARATORS FOR MONTEREY HARBOR		
DRAWN BY: JAH			
CHECKED BY:	PLAN		
DATE: August 1998	Waterfront Parking Lot		
SCALE: 1:500	APPROVED		
SHEET: 1 of 1	Thomas Reeves CITY ENGINEER	38673 REGIST. No.	8/7/98 DATE
CAD DWG NAME: oilsep.dwg		PROJECT NAME:	
PRINT #:		DRAWING #:	

06.2303.01

5366 D6.2303

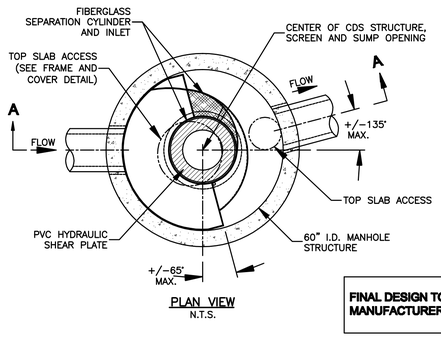

PLAN VIEW
N.T.S.

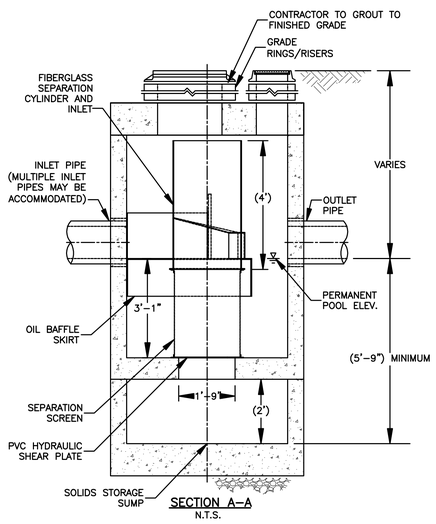

SECTION A–A
N.T.S.

PRECAST CONCRETE WATER QUALITY SYSTEM
CDS2025 STANDARD DETAIL

FINAL DESIGN TO BE PROVIDED BY MANUFACTURER PRIOR TO CONSTRUCTION

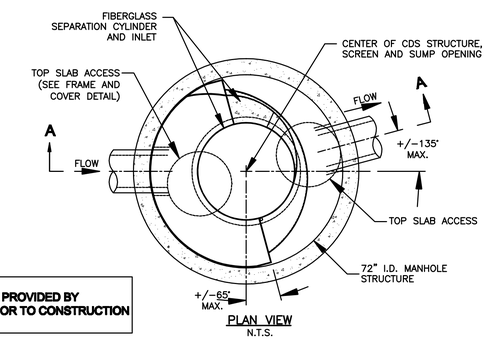

PLAN VIEW
N.T.S.

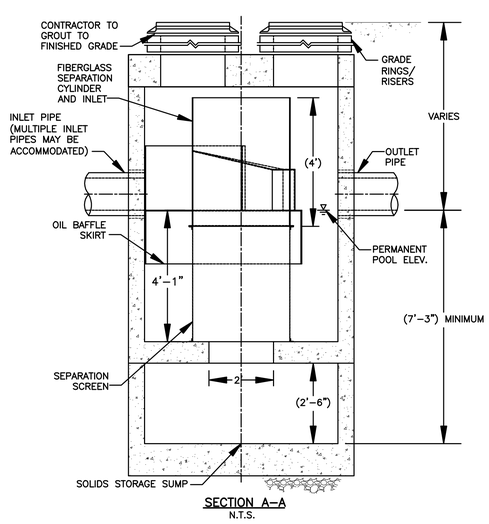

SECTION A–A
N.T.S.

PRECAST CONCRETE WATER QUALITY SYSTEM
CDS3035 STANDARD DETAIL

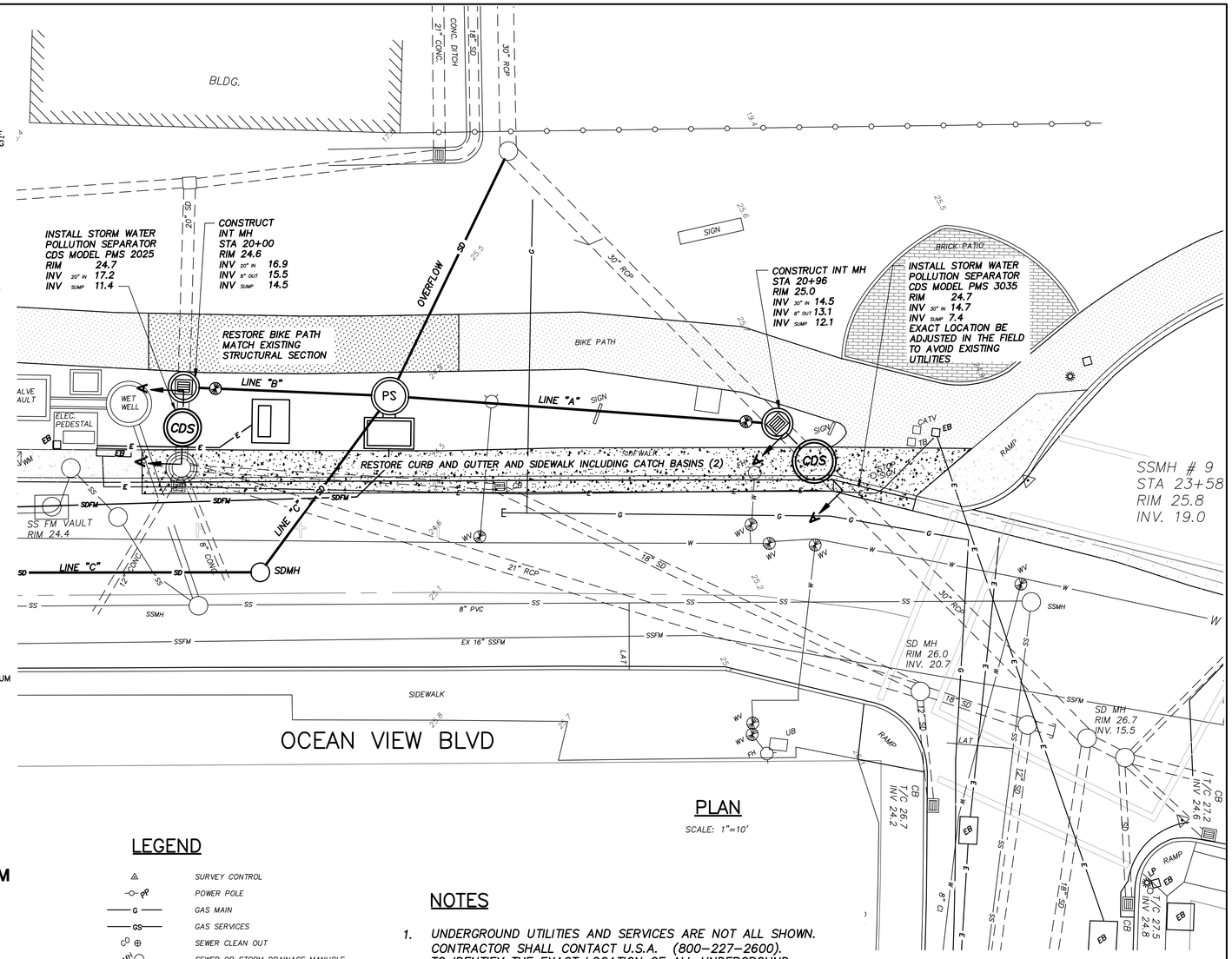

PLAN
SCALE: 1"=10'

GENERAL NOTES

1. CONTECH TO PROVIDE ALL MATERIALS UNLESS NOTED OTHERWISE.
2. DIMENSIONS MARKED WITH ( ) ARE REFERENCE DIMENSIONS. ACTUAL DIMENSIONS MAY VARY.
3. FOR FABRICATION DRAWINGS WITH DETAILED STRUCTURE DIMENSIONS AND WEIGHTS, PLEASE CONTACT YOUR CONTECH STORMWATER SOLUTIONS REPRESENTATIVE. WWW.CONTECHSTRMWATER.COM
4. CDS WATER QUALITY STRUCTURE SHALL BE IN ACCORDANCE WITH ALL DESIGN DATA AND INFORMATION CONTAINED IN THIS DRAWING.
5. STRUCTURE AND CASTINGS SHALL MEET AASHTO HS20 LOAD RATING.
6. PVC HYDRAULIC SHEAR PLATE IS PLACED ON SHELF AT BOTTOM OF SCREEN CYLINDER. REMOVE AND REPLACE AS NECESSARY DURING MAINTENANCE CLEANING.

INSTALLATION NOTES

1. ANY SUB–BASE, BACKFILL DEPTH, AND/OR ANTI–FLOTATION PROVISIONS ARE SITE–SPECIFIC DESIGN CONSIDERATIONS AND SHALL BE SPECIFIED BY ENGINEER OF RECORD.
2. CONTRACTOR TO PROVIDE EQUIPMENT WITH SUFFICIENT LIFTING AND REACH CAPACITY TO LIFT AND SET THE CDS MANHOLE STRUCTURE (LIFTING CLUTCHES PROVIDED).
3. CONTRACTOR TO ADD JOINT SEALANT BETWEEN ALL STRUCTURE SECTIONS, AND ASSEMBLE STRUCTURE.
4. CONTRACTOR TO PROVIDE, INSTALL, AND GROUT PIPES. MATCH PIPE INVERTS WITH ELEVATIONS SHOWN.
5. CONTRACTOR TO TAKE APPROPRIATE MEASURES TO ASSURE UNIT IS WATER TIGHT, HOLDING WATER TO FLOWLINE INVERT MINIMUM. IT IS SUGGESTED THAT ALL JOINTS BELOW PIPE INVERTS ARE GROUTED.

LEGEND

	SURVEY CONTROL
PP	POWER POLE
G	GAS MAIN
GS	GAS SERVICES
CO	SEWER CLEAN OUT
MH	SEWER OR STORM DRAINAGE MANHOLE
SD	UNDERGROUND STORM DRAINAGE
W	WATER MAIN
WS	WATER SERVICE
WM	WATER METER
WV	WATER VALVE
XX.XX	SPOT ELEVATION
CB	CATCH BASIN
	TREE – DID NOT LOCATE ALL TREES
SS	EXISTING SANITARY SEWER
LAT	SANITARY SEWER LATERAL
CAP	SANITARY SEWER CAP
E	UNDERGROUND ELECTRICAL
T	UNDERGROUND TELEPHONE DUCT BANK
SD	EXISTING STORM DRAIN
SD	NEW STORM DRAIN
SDFM	NEW STORM DRAIN FORCE MAIN
GV	NEW GATE VALVE
CO	NEW STORM DRAIN CLEAN OUT
FI	NEW FLUSHING INLET
PH #	POTHOLE LOCATION

NOTES

1. UNDERGROUND UTILITIES AND SERVICES ARE NOT ALL SHOWN. CONTRACTOR SHALL CONTACT U.S.A. (800–227–2600). TO IDENTIFY THE EXACT LOCATION OF ALL UNDERGROUND UTILITIES PRIOR TO CONSTRUCTION. CONTRACTOR SHALL POTHOLE TO VERIFY THE EXACT LOCATIONS AND DEPTHS OF ALL UTILITIES PRIOR TO CONSTRUCTION, AND SHALL NOTIFY THE ENGINEER OF ANY UTILITY CONFLICTS.
2. ELEVATIONS ARE BASED ON USGS, NAVD 88 DATUM. ELEVATION MEASUREMENTS ARE IN FEET.

NEILL ENGINEERS CORP. CARMEL, CALIFORNIA

STORM WATER POLLUTION SEPARATORS

URBAN RUNOFF DIVERSION PROJECT – PHASE 3

CITY OF PACIFIC GROVE, CALIFORNIA

REGISTERED PROFESSIONAL ENGINEER SHERMAN W. FOX No. 29411 EXP. 3-31-13 CIVIL STATE OF CALIFORNIA

REVISED OCTOBER, 2012
REVISED MAY 7, 2012

W.O. 8311
MARCH 2012
SCALE: 1"=10'

Registered Civil Engineer No. 29411 Date

Y:\PROJECTS\dwg\PacificGrove\PG OLD\8311 PG SD URD Ph3\OCEAN VIEW-SD-PROJECT\dwg\OCEAN VIEW.dwg 3-23-20 01:49:56 PM

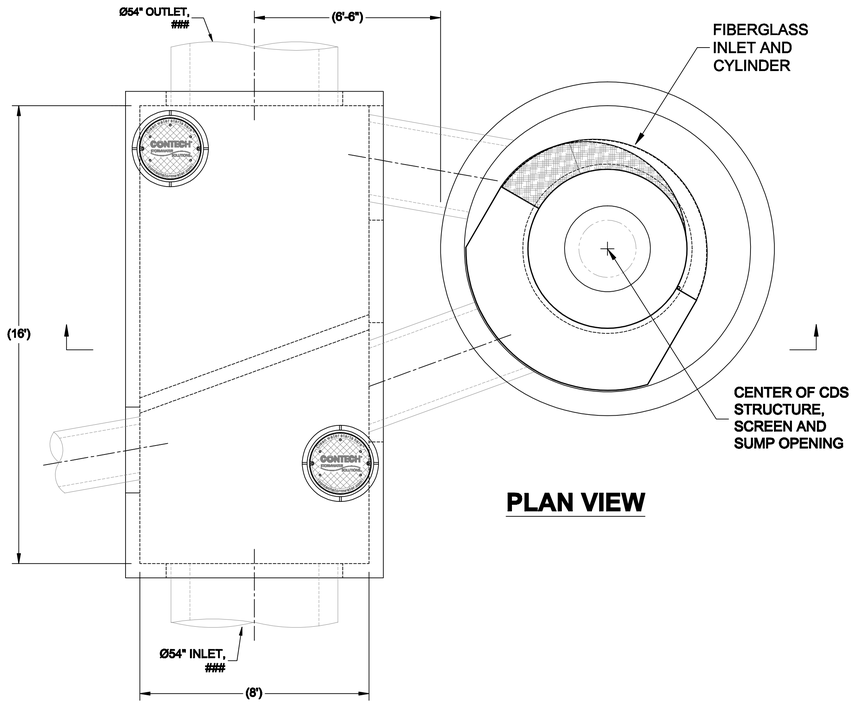

PLAN VIEW

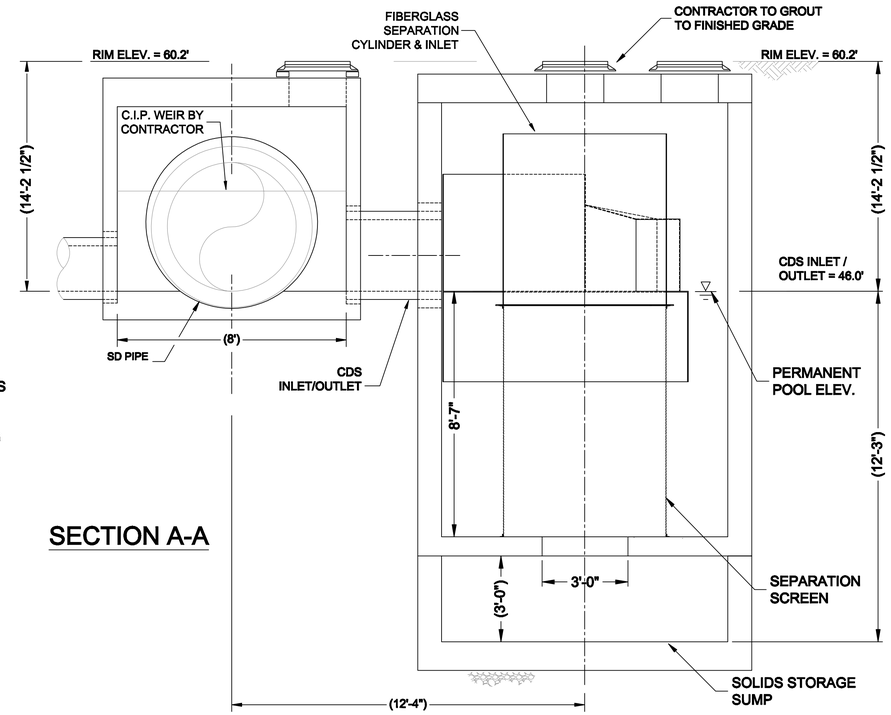

SECTION A-A

GENERAL NOTES

1. CONTECH TO PROVIDE ALL MATERIALS UNLESS NOTED OTHERWISE.
2. DIMENSIONS MARKED WITH ( ) ARE REFERENCE DIMENSIONS. ACTUAL DIMENSIONS MAY VARY.
3. FOR FABRICATION DRAWINGS WITH DETAILED STRUCTURE DIMENSIONS AND WEIGHTS, PLEASE CONTACT YOUR CONTECH STORMWATER SOLUTIONS REPRESENTATIVE. www.contechstormwater.com
4. CDS WATER QUALITY STRUCTURE SHALL BE IN ACCORDANCE WITH ALL DESIGN DATA AND INFORMATION CONTAINED IN THIS DRAWING.
5. STRUCTURE AND CASTINGS SHALL MEET AASHTO HS20 LOAD RATING.
6. PVC HYDRAULIC SHEAR PLATE IS PLACED ON SHELF AT BOTTOM OF SCREEN CYLINDER. REMOVE AND REPLACE AS NECESSARY DURING MAINTENANCE CLEANING.

INSTALLATION NOTES

1. ANY SUB-BASE, BACKFILL DEPTH, AND/OR ANTI-FLOTATION PROVISIONS ARE SITE-SPECIFIC DESIGN CONSIDERATIONS AND SHALL BE SPECIFIED BY ENGINEER OF RECORD.
2. CONTRACTOR TO PROVIDE EQUIPMENT WITH SUFFICIENT LIFTING AND REACH CAPACITY TO LIFT AND SET THE CDS MANHOLE STRUCTURE (LIFTING CLUTCHES PROVIDED).
3. CONTRACTOR TO ADD JOINT SEALANT BETWEEN ALL STRUCTURE SECTIONS, AND ASSEMBLE STRUCTURE.
4. CONTRACTOR TO PROVIDE, INSTALL, AND GROUT PIPES. MATCH PIPE INVERTS WITH ELEVATIONS SHOWN.
5. CONTRACTOR TO TAKE APPROPRIATE MEASURES TO ASSURE UNIT IS WATER TIGHT, HOLDING WATER TO FLOWLINE INVERT MINIMUM. IT IS SUGGESTED THAT ALL JOINTS BELOW PIPE INVERTS ARE GROUTED.

SITE DESIGN DATA

WATER QUALITY FLOW RATE	#### CFS
PEAK FLOW RATE	### CFS
RETURN PERIOD OF PEAK FLOW	### YRS

CONTECH
PROPOSAL
DRAWING

CDS5678-10D - 510549-10&20
GREENWOOD PARK
PACIFIC GROVE, CALIFORNIA
SITE DESIGNATION: CENTRAL AT 13TH

This drawing or electronic file is for the purpose of specifying stormwater treatment equipment to be furnished by CONTECH Stormwater Solutions (CSS). Title block information, excluding the CSS logo and the stormwater treatment system product designation and patent number, if applicable, may be deleted if necessary. Revisions to any part of this drawing, except as previously noted, without prior coordination with CSS shall be considered unauthorized use of proprietary information.

CONTECH STORMWATER SOLUTIONS
contechstormwater.com

BASE FILE NAME: CDS5678-PRO.DWG
SCALE: NTS
DESIGNED: DRAWN:
DATE:
REV:

NEILL ENGINEERS CORP. CARMEL, CALIFORNIA

DETAILS
STORM WATER POLLUTION SEPARATOR FOR GREENWOOD PARK
CENTRAL AVENUE AT 13TH STREET
CITY OF PACIFIC GROVE, CALIFORNIA

REGISTERED PROFESSIONAL ENGINEER SHERMAN W. LOW No. 29411 EXP. 3-31-19 CIVIL STATE OF CALIFORNIA

AS BUILT

W.O. 8379
AUGUST 2015
SCALE: NONE

Registered Civil Engineer No. 29411 Date

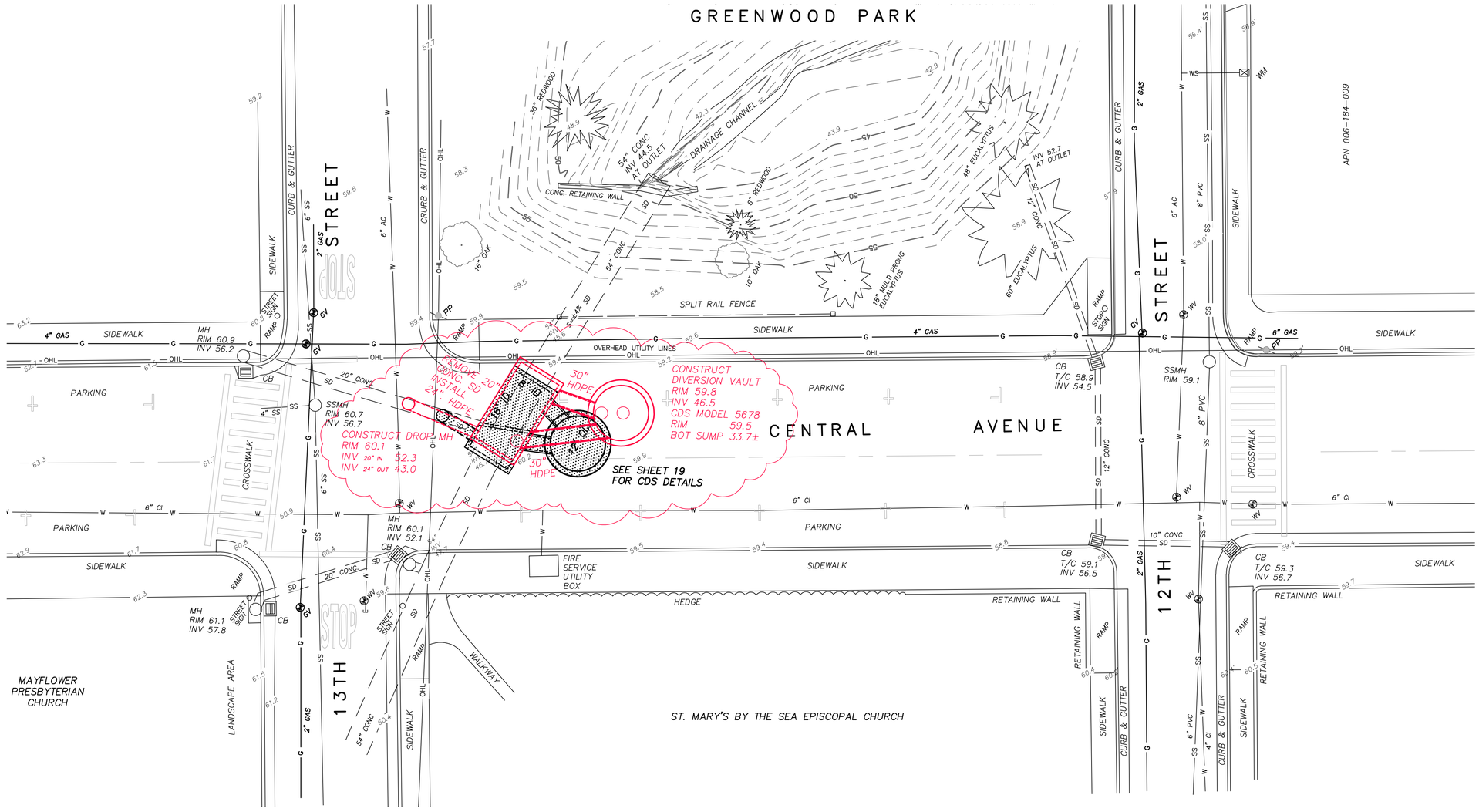

LEGEND

△	SURVEY CONTROL	—ss SD ss—	UNDERGROUND STORM DRAINAGE	—SS—	SANITARY SEWER
—PP—	POWER POLE	—W—	WATER MAIN	—E—	UNDERGROUND ELECTRICAL
—G—	GAS MAIN	—WS—	WATER SERVICE	—T—	UNDERGROUND TELEPHONE DUCT BANK
—GS—	GAS SERVICES	⊠ WM	WATER METER	—OHL—	OVERHEAD UTILITY LINES (ELEC, TEL & CATV)
CO ⊕	SEWER CLEAN OUT	WV	WATER VALVE	===SD=====	STORM DRAIN
MH ○	SEWER OR STORM DRAINAGE MANHOLE	CB ◈	CATCH BASIN		
XX.X	SPOT ELEVATION		TREE – DID NOT LOCATE ALL TREES		

REGISTERED PROFESSIONAL ENGINEER
SHERMAN W. LOW
No. 29411
EXP. 3-31-19
CIVIL
STATE OF CALIFORNIA

NEILL ENGINEERS CORP. CARMEL, CALIFORNIA

IMPROVEMENT PLANS
STORM WATER POLLUTION SEPARATOR FOR GREENWOOD PARK

CENTRAL AVENUE AT 13TH STREET

CITY OF PACIFIC GROVE, CALIFORNIA

AS BUILT

W.O. 8379
AUGUST 2015
SCALE: 1"=10'

Registered Civil Engineer No. 29411 Date

Y:\PROJECTS\dwg\PacificGrove\8379 CDS UNIT GREENWOOD PARK\8379-PROJECT\dwg\8379cds at greenwood park As Built.dwg 3-05-18 07:47:21 AM

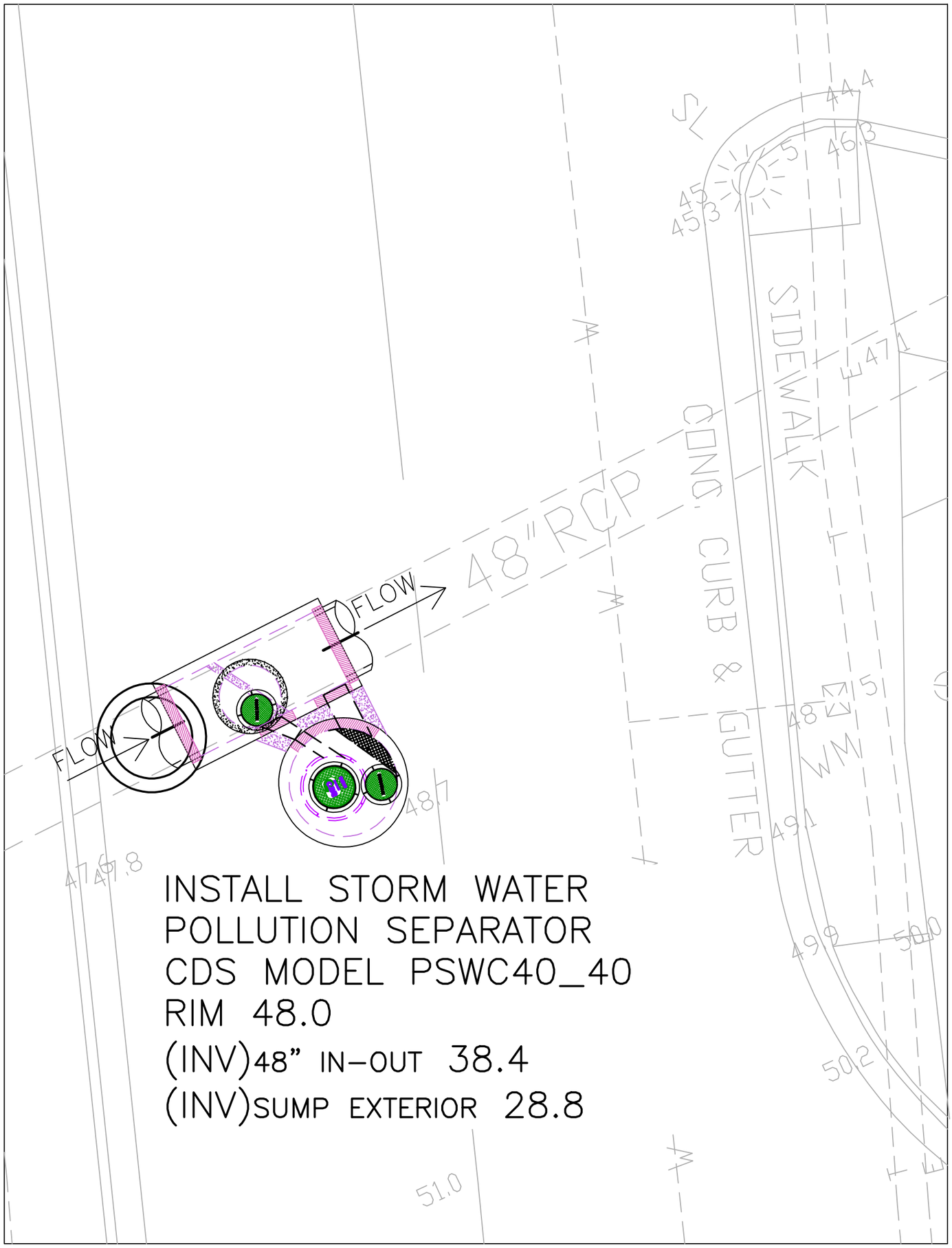

STORM WATER POLLUTION SEPARATOR
NEAR LOVER'S POINT PARK
17TH ST AND UPPER PARKING LOT

SCALE: 1"=5'

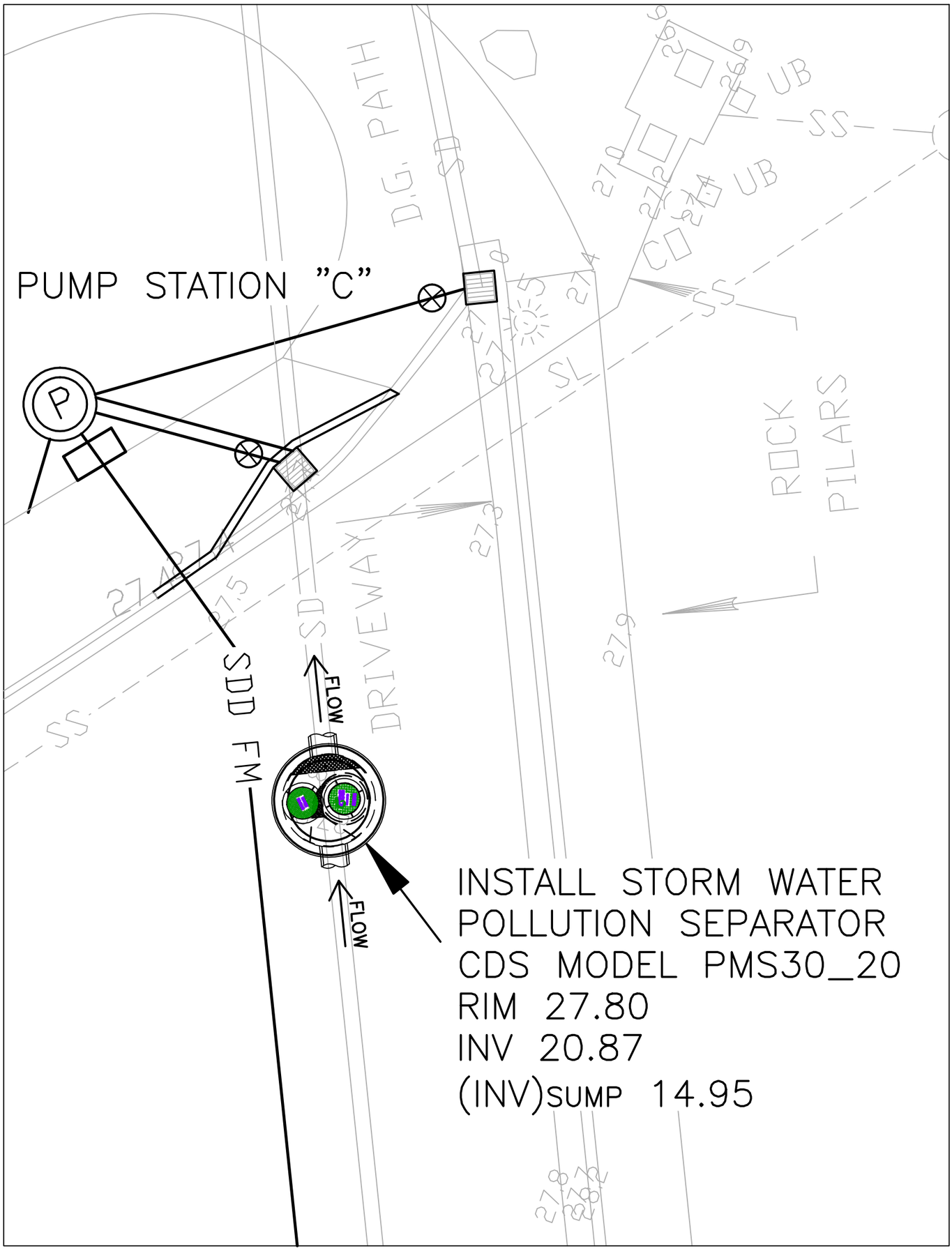

STORM WATER POLLUTION SEPARATOR
NEAR LOVER'S POINT PARK
17TH ST AND LOWER PARKING LOT

SCALE: 1"=5'

Appendix B. Device Treatment Rates

The table below includes device-specific treatment rates utilized in the analysis. Treatment rates were provided by municipal staff. See Appendix 1 for more design plan information. Contact Gary Conley (gary@2ndnaturewater.com) if treatment rates are to be updated, as updates to the treatment rates below may affect the results of this analysis.

City	BMP ID	Manufacturer	Name/Model	Treatment Rate (cfs)	State Approved Device
Seaside	S69-TV1	*n/a*	*n/a*	126.0	No*
Pacific Grove	Greenwood Park	Contech	CDS5678	35.0	Yes
Sand City	Sand_Dollar_SWInt1	Associated Concrete Products/Quickset	Storm Interceptor	23.7	No*
Monterey County	MCO_TV1	Contech	Vortechs VX-9000	14.0	No
Monterey County	MCO_TV5	Contech	Vortechs VX-9000	14.0	No
Monterey County	MCO_TV7	Contech	Vortechs VX-9000	14.0	No
Sand City	Edgewater_SWInt1	Associated Concrete Products/Quickset	Storm Interceptor	9.6	No*
Pacific Grove	PG_CDS_Oceanview17th	Contech	CDS4040	8.4	Yes
Carmel	CDS1	Contech	CDS4040	6.0	Yes
Carmel	CDS2	Contech	CDS4040	6.0	Yes
Carmel	CDS4	Contech	CDS4040	6.0	Yes
Pacific Grove	PG_CDS_Eardley	Contech	CDS3035	5.3	Yes
Carmel	CDS3	Contech	CDS3035	3.8	Yes
Seaside	S66-CB10	Hydro International	Downstream Defender	3.0	Yes
Seaside	S66-CB11	Hydro International	Downstream Defender	3.0	Yes
Seaside	S66-CB12	Hydro International	Downstream Defender	3.0	Yes
Seaside	S66-CB9	Hydro International	Downstream Defender	3.0	Yes
Pacific Grove	PG_CDS_LP_Parking	Contech	CDS3020	2.8	Yes
City of Monterey	D05-STMH39	IMBRIUM	STORMCEPTOR 3600	2.5	No
City of Monterey	D05-STMH9	IMBRIUM	STORMCEPTOR 3600	2.5	No
Pacific Grove	PG_CDS_Oceanview	Contech	CDS2025	2.2	Yes
Seaside	S66-CB1	Contech	CDS2015_4	0.5	Yes
Seaside	S66-CB2	Contech	CDS2015_4	0.5	Yes
Seaside	S66-CB3	Contech	CDS2015_4	0.5	Yes
Seaside	S66-CB4	Contech	CDS2015_4	0.5	Yes
Seaside	S66-CB5	Contech	CDS2015_4	0.5	Yes
Seaside	S66-CB6	Contech	CDS2015_4	0.5	Yes
Seaside	S66-CB7	Contech	CDS2015_4	0.5	Yes

Appendix C. Drainage Areas

City of Carmel

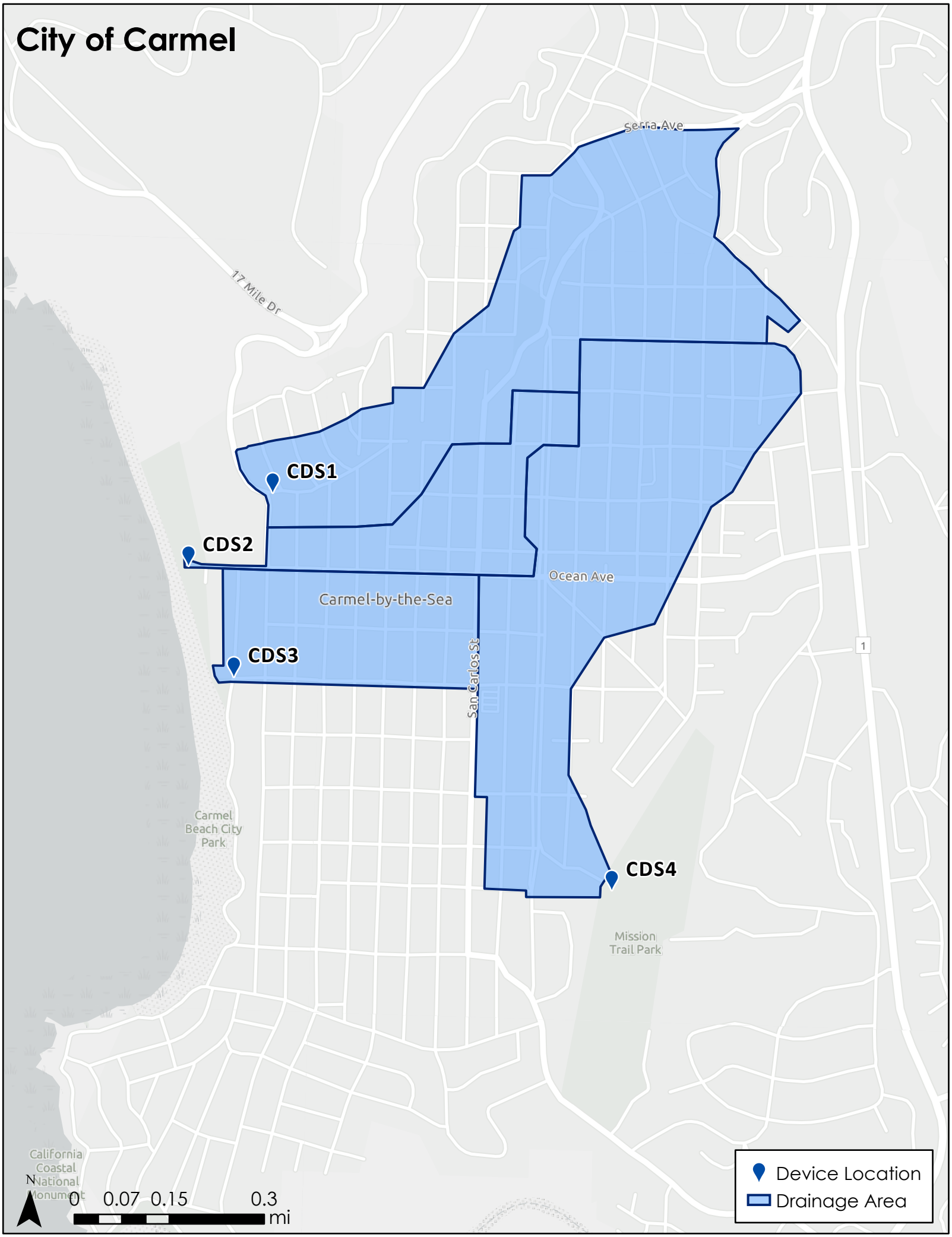

City of Monterey
Custom House Plaza
Municipal Whrf
Municipal Whrf
Lighthouse Ave
Lighthouse Ave
Washington St
D05-STMH39
D05-STMH9
Tyler St
Tyler St
Del Monte Ave
Del Monte Ave
Del Monte Ave
Del Mon
Washington St
Figueroa St
E Franklin St
E Franklin St
Taufner Ln
N
0 0.01 0.03 0.05
mi
Device Location
Drainage Area

City of Pacific Grove

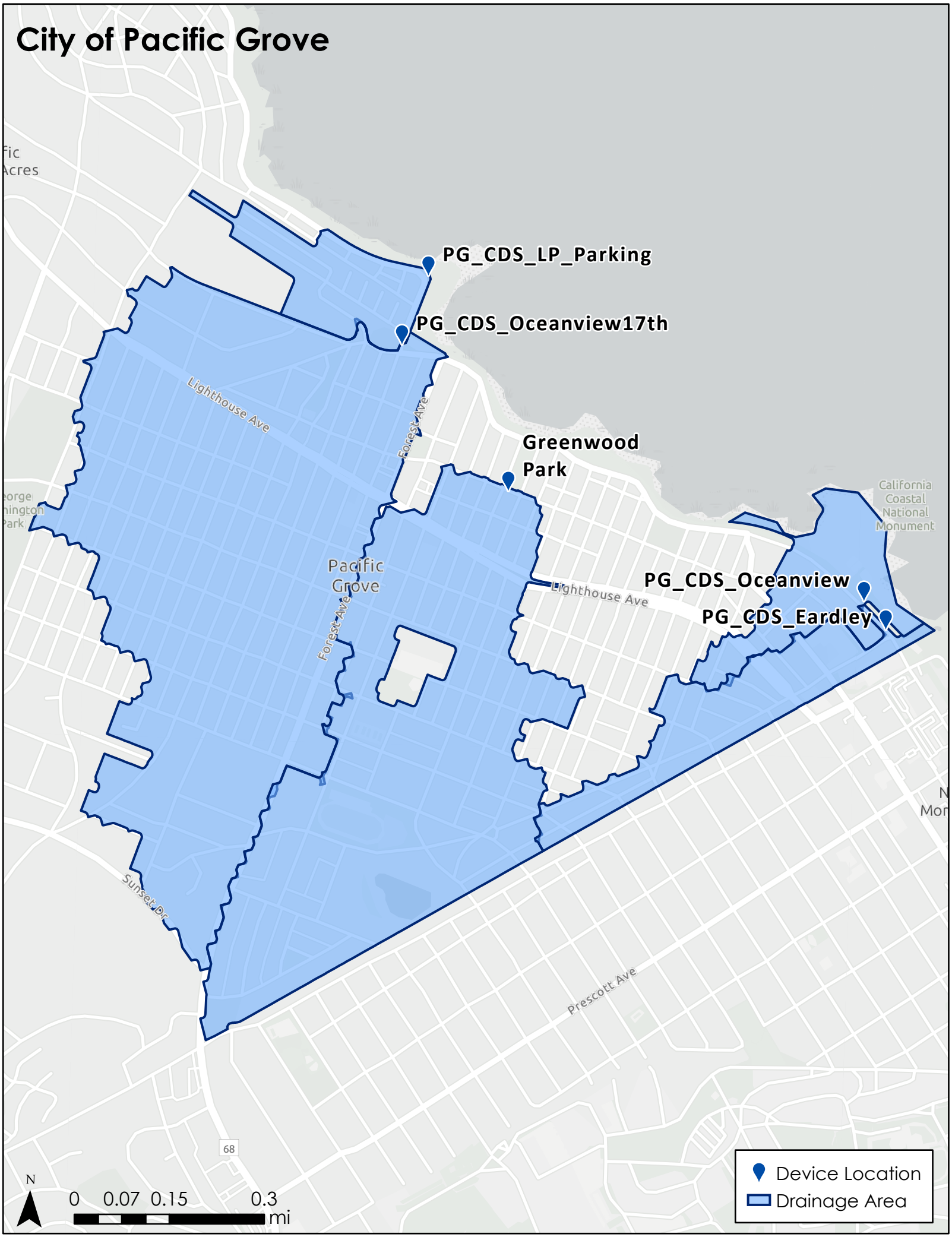

City of Sand City
Edgewater_SWInt1
Sand_Dollar_SWInt1
California Ave
Ord Ave
Fremont Blvd
E Frontage Rd
Del Monte Blvd
Playa Ave
Metz Rd
Trioga Ave
The Mall
La Salle Ave
Fir Ave
East Ave
San Pablo Ave
California Ave
Echo Ave
Phoenix Ave
Dias St
1
N
0
0.04
0.07
0.14
mi
Device Location
Drainage Area

City of Seaside

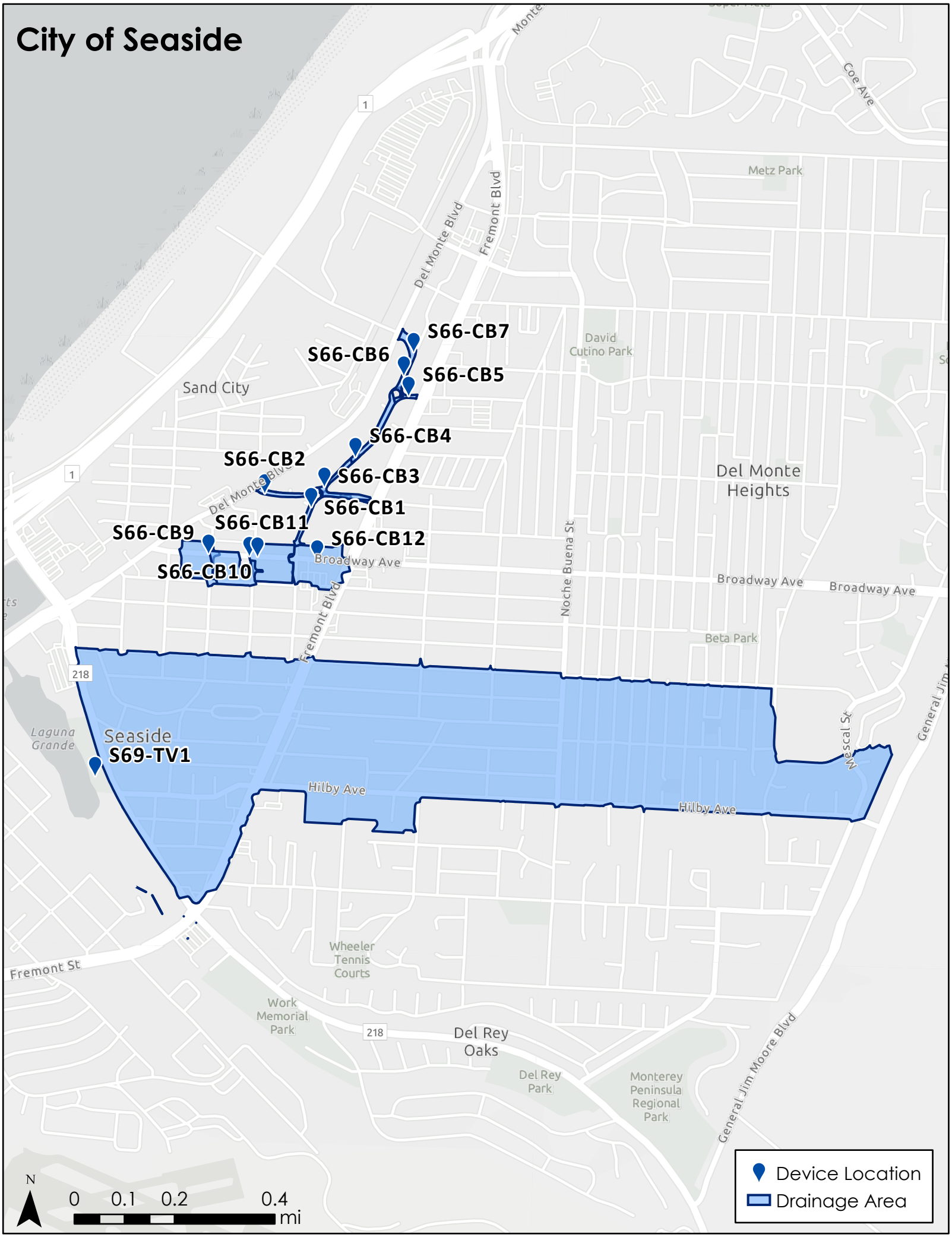

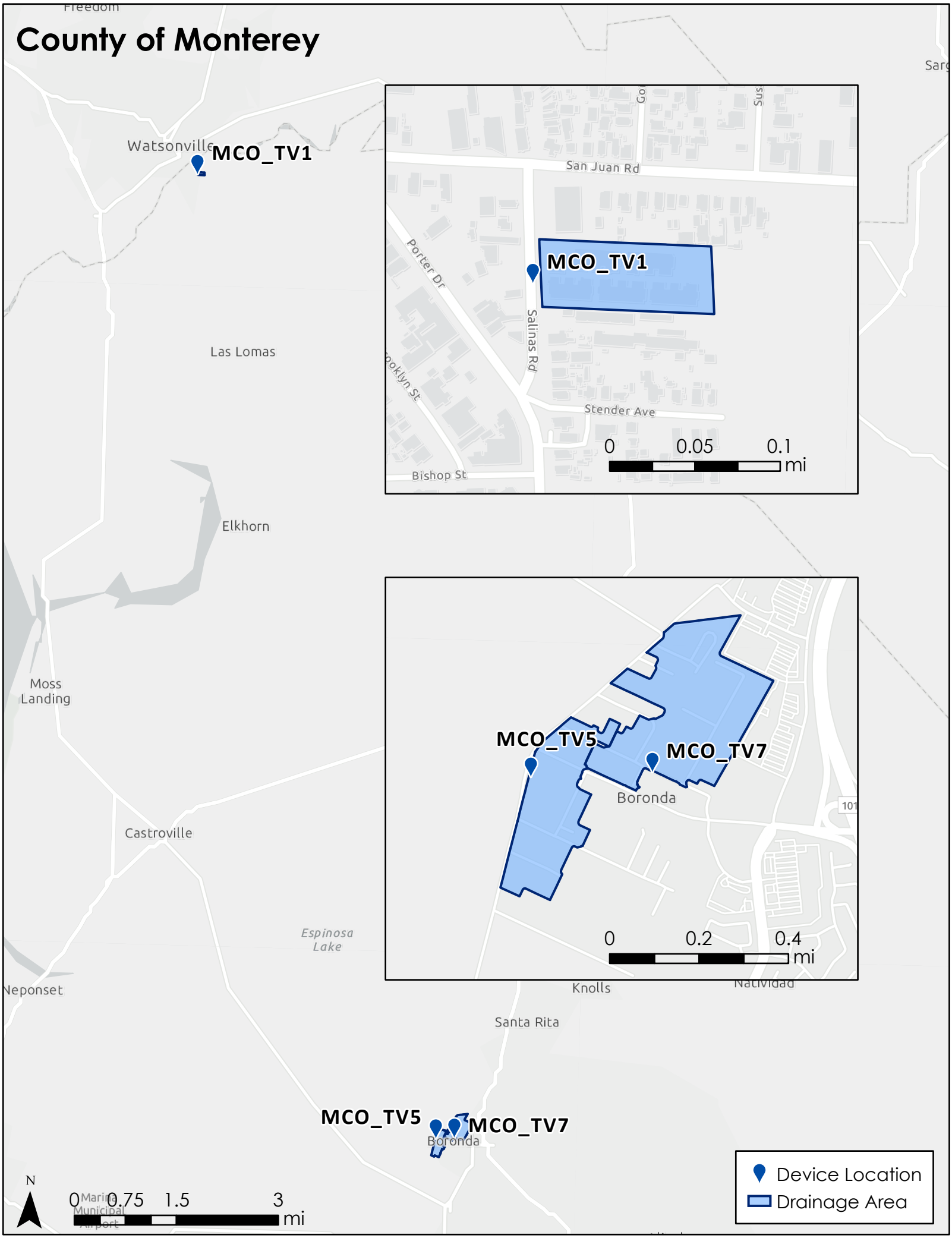
County of Monterey
Watsonville
MCO_TV1
Las Lomas
Elkhorn
Moss Landing
Castroville
Espinosa Lake
Neponset
Knolls
Natividad
Santa Rita
Boronda
MCO_TV5
MCO_TV7
San Juan Rd
Porter Dr
Salinas Rd
Stender Ave
Bishop St
0 0.05 0.1 mi
0 0.2 0.4 mi
0 0.75 1.5 3 mi
N
Device Location
Drainage Area

Systems, 77, p.101344. https://www.2ndnaturewater.com/wp-content/uploads/2019/02/Conley_etal_2019.pdf

Conley, G., Beck, N., Riihimaki, C.A., and Tanner, M., 2020. Quantifying patterns stormwater infiltration system clogging to inform pollution reduction tracking. Water Research, *in review.*

City of Salinas. 2019. City of Salinas Monitoring and Reporting Program, Annual Report for Water Year 2019. 67 pp.

Dwyer, J. F., E.G. McPherson, H.W. Schroeder, and R.A Rowntree. 1992. Assessing the benefits and costs of the urban forest. Journal of Arboriculture, 18, 227-227.

Roy, S., J. Byrne, and C. Pickering. 2012. A systematic quantitative review of urban tree benefits, costs, and assessment methods across cities in different climatic zones. Urban Forestry & Urban Greening, 11(4), 351-363.

Schueler, T. 2000. The Importance of Imperviousness: The Practice of Watershed Protection. Center for Watershed Protection, Ellicott City, MD. Pages 7-18.

State Water Resources Control Board (SWRCB), 2015a. Water Quality Control Plan: Ocean Waters of California (Ocean Plan). Effective January 2016. http://www.waterboards.ca.gov/water_issues/programs/ocean/docs/cop2015.pdf

State Water Resources Control Board (SWRCB), 2015b. Final Part 1 Trash Provisions of the Water Quality Control Plan for Inland Surface Waters, Enclosed Bays, and Estuaries of California (ISWEBE Plan). Final Staff Report for Trash Amendments; Appendix E. April 2015. https://www.waterboards.ca.gov/water_issues/programs/trash_control/docs/trash_appendix_e_121615.pdf

Wheeler, S. G., and Knight, E.K. 2017. Monitoring Considerations for the Trash Amendments. California Ocean Science Trust. Oakland, CA.

Wickham, J., Herold, N., Stehman, S.V., Homer, C.G., Xian, G. and Claggett, P., 2018. Accuracy assessment of NLCD 2011 impervious cover data for the Chesapeake Bay region, USA. *ISPRS Journal of Photogrammetry and Remote Sensing*, *146*, pp.151-160.